16-549-101
October 6,1986

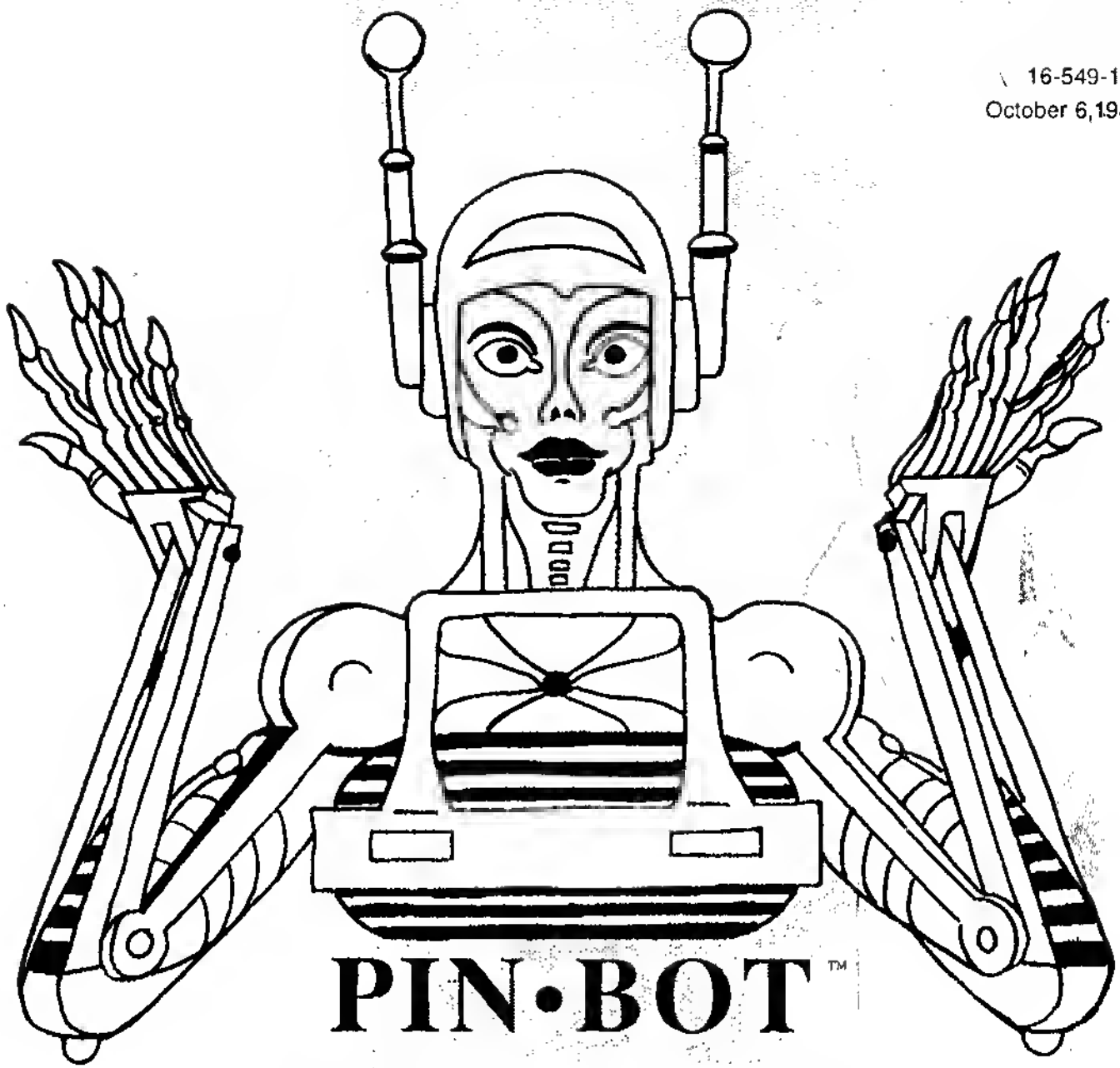

PIN•BOT™

INSTRUCTION MANUAL

Williams®
ELECTRONICS GAMES, INC.
3401 N. California Avenue
Chicago, Illinois 60618
Phone: (312) 267-2240 - Fax: (312) 267-3747
Telex 253095

16-549-101
October 6,1986

PIN•BOT™

INSTRUCTION MANUAL

Williams®
ELECTRONICS GAMES, INC.
3401 N. California Avenue
Chicago, Illinois 60618
Phone: (312) 267-2240 - Fax: (312) 267-3747
Telex 253095

Contents

Section 1 - Game Operation & Test Information

PIN•BOT (System-11) ROM Summary . . . 1
Connector Identification . . . 2
PIN•BOT Circuit Boards . . . 2
PIN•BOT Game Control Locations . . . 2
Pinball Game Assembly Instructions . . . 3
Game Operation . . . 3
Figure 1. Pinball Assembly, Playfield Pitch Angle, and Leg Leveler Details . . . 4
PIN•BOT Game Play . . . 5
PIN•BOT Game Status Displays . . . 6
PIN•BOT Audit Table . . . 7
PIN•BOT Game Adjustment Table . . . 8-9
Game Adjustment Procedure . . . 10
Items 01 . . . 10
02 - 06 . . . 11
07 - 12 . . . 12
13 - 21 . . . 13
22 - 29 . . . 14
30 - 39 . . . 15
40 - 45 . . . 16
46 - 51 . . . 17
52 - 54 . . . 18
55 - 58 . . . 19
59 - 62 . . . 20
63 - 65 . . . 21
66 - 70 . . . 22
Resetting the High Scores . . . 23
Game Pricing . . . 23
Pricing Table . . . 24
Test/Diagnostic Procedures . . . 25
Music Test . . . 25
Display Test . . . 25
Sound Test . . . 25
Lamp Tests . . . 26
PIN•BOT Lamp-Matrix Table . . . 26
Solenoid Test . . . 27
PIN•BOT Solenoid Table . . . 27
Special and Controlled Solenoids - Diagrams and Details . . . 28
Switch Tests . . . 28
PIN•BOT Switch-Matrix Table . . . 29
Ending the Diagnostic Tests . . . 30
Auto Burn-in Mode . . . 30
System-11 Memory Chip Test . . . 30
CPU LED Indicator Codes Table . . . 31
System-11 Sound Section Test . . . 31
Maintenance Information . . . 32
Figure 2. Adjustments and Lubrication Points, Ball Feeder Trough . . . 32

Contents

Section 2 - Game Parts Information

Player Score Display Panels & Segments Diagrams 34
Ball Trough Feeder, C-9638 35
Playfield Pivot & Hinge Bracket 35
Ball In Play/Match Display Panel 35
Alphanumeric Master Display Board (D-10877) 36
D-8345 Power Supply Board 37
System 11A CPU Board Parts Layout and Parts Listing . . . . . 38 - 39
Background Sound & Speech Board (D-11297) 40
Backbox Parts 41
3-Bank Drop Target Assembly (D-9355) 42
Flipper Assemblies (C-9952-R & C-9953-L) 43
Chest Lamp Matrix Board (C-11310) 43
Visor & Targets Mechanism 44
Visor Assembly (C-11159) 44
Visor Motor Assembly (B-11169) 45
Visor Teeth Target Carrier Assembly (B-11156 45
Ramp Lifting Mechanism 46
Jet Bumper (B-9414) 47
Ball EjectAssembly (B-9361-R-1) 47
Ramp Exit Playfield (C-11248) 48
Miscellaneous PIN•BOT Parts 48
Playfield Parts 49
Solenoids/Flashers & Rubber Parts 50
Lamps 51
Switches 52

Section 3 - Reference Diagrams & Schematics

Cabinet Wiring Diagram 54
Alphanumeric Master Display Board Schematic 55
Background Music & Speech Board Schematic 56-57
Interboard Signals Diagrams 58
Schematic, System 11 CPU (16-8947, Sheet 1 of 4) 59
Schematic, System 11 CPU (16-8947, Sheet 2 of 4) 60
Schematic, System 11 CPU (16-8947, Sheet 3 of 4) 61
Schematic, System 11 CPU (16-8947, Sheet 4 of 4) 62
Power Wiring Diagram 63
D-8345 Power Supply Schematic 64
C-8364 Display Schematic 64

Section 1

Game Operation & Test Information

- *PIN•BOT* (System-11) ROM Summary
- Pinball Game Assembly Instructions
- Game Play
- Game Status Displays
- Game Adjustment Procedure
- Game Pricing
- Test/Diagnostic Procedures

PIN•BOT (System-11) ROM Summary

IC	DESCRIPTION	TYPE	IDENTIFIER	BOARD	PART NUMBER
Game ROM 1	32K x 8 ROM	27256	U27	CPU	A-5343-549-2
Game ROM 2	16K x 8 ROM	27128	U26	CPU	A-5343-549-1
Sound ROM 1	32K x 8 ROM	27256	U21	CPU	A-5343-549-4
Sound ROM 2	32K x 8 ROM	27256	U22	CPU	A-5343-549-3
Background (B/G) Sound/Speech ROM 1	32K x 8 ROM	27256	U4	B/G Mus./Sp.	A-5343-549-5
B/G Snd./Spch. ROM 2	32K x 8 ROM	27256	U19	B/G Mus./Sp.	A-5343-549-6

NOTICE

To order a replacement ROM from your authorized WILLIAMS ELECTRONICS GAMES distributor, specify: (1) part number (if available); (2) ROM label color; (3) ROM level (number) on the label; (4) which game the ROM is used in.

CONNECTOR IDENTIFICATION

WILLIAMS ELECTRONICS GAMES uses a special technique to identify connectors. Each plug or jack receives a prefix number (which identifies the circuit board), a letter, and a number. J-designations refer to the male part of a connector. P-designations refer to the female part of a connector. For example, 1J1 designates jack 1 of board 1 (a CPU Board jack); 3P6 designates plug 6 of board 3 (a Power Supply Board plug).

Identifying the specific pin number of a connector involves a hyphen, which separates the pin number from the plug or jack designation. For example, 1J1-3 refers to pin 3 of jack 1 on board 1.

PIN•BOT CIRCUIT BOARDS

All *PIN•BOT* Circuit Boards are in the backbox. They are accessible by removing the backbox glass, unlatching the insert board, and swinging it open.

CPU BOARD. The System-11 CPU Board (p/n D-10881) must be equipped with the ROMs specified in the *PIN•BOT* (System-11) ROM Summary. For this ROM complement, on *Revision B (or later)* CPU boards (having jumpers W1 through W18): jumpers W1, W2, W4, W5, W7, W8, W11, W12, W13, W14, W16, W17, and W18 must be connected. Jumper W7 is cut/removed for West German games.

BACKGROUND MUSIC & SPEECH BOARD. The Background Music & Speech Board is p/n D-11297, as supplied with ROM and microprocessor.

DISPLAY BOARDS. The Alphanumeric Master Display Board is p/n D-10877. Two of the 7-digit Player Score Displays (player 1 and 2) are p/n C-10866. The player 3 and 4 Displays are p/n C-8364-1. The 2-digit Credit (also BALL IN PLAY), 2-digit MATCH Display is p/n C-8365-1.

POWER SUPPLY BOARD. The Power Supply Board is p/n D-8345 -549.

Prefix numbers for *PIN•BOT* System-11 circuit boards and major assemblies are listed below. A prefix number may precede a component designator to identify the unit (e.g., connector 1J1).

1 - CPU	6 - Backbox	11 - B/G Music/Speech
2 - (not assigned)	7 - Cabinet	12 - (not assigned)
3 - Backbox Power Supply	8 - Playfield	13 - (not assigned)
4 - Alphanumeric Display	9 - Insert Board	14 - (not assigned)
5 - Player Score Displays	10 - (not assigned)	15 - Flipper Power Supply

PIN•BOT GAME CONTROL LOCATIONS

The On-Off switch is on the bottom of the cabinet near the right front leg.

The Volume Control is on the left inner wall of the cabinet on the tilt mechanisms board. It is accessible by opening the coin box door.

The Credit switch is a pushbutton to the left of the coin door on the cabinet exterior.

GAME ADJUSTMENT/DIAGNOSTIC SWITCHES. *PIN•BOT* allows the operator to program virtually all game adjustments, obtain bookkeeping information, and diagnose problems, using only three switches mounted on the inside of the coin door and the Credit button beside the coin door.

ADVANCE, AUTO-UP/MANUAL-DOWN, and HIGH-SCORE RESET are the switches located on the inside of the coin door. Refer to the Game Status Displays text and the Text/Diagnostic Procedures for details concerning their operation.

The Memory Protect switch is on the inside frame of the coin door. This interlock switch must be open to clear bookkeeping totals and to make game adjustments. It automatically opens, when the coin door opens.

PIN•BOT GAME CONTROL LOCATIONS (Continued)

The CPU Diagnostic switch (SW 2) is the lower switch (of the two switches mounted on the left edge of the CPU Board) near a large, socketed microprocessor chip. This switch initiates the Memory Chip Test explained in the Diagnostic Procedures.

The Sound Diagnostic switch (SW 1) is the upper switch of the two mounted on the left edge of the CPU Board. This switch initiates the Sound Section Test. Refer to the Diagnostic Procedures.

PINBALL GAME ASSEMBLY INSTRUCTIONS

1. Open the shipping container; remove all cartons, parts, and other items, and set them aside.
2. Place cabinet on a support and attach rear legs, using leg bolts (provided in the cash box).
3. Attach the front legs, using leg bolts.
4. Reach into the cabinet and backbox and check the mating of the interconnecting cables, matching several wire colors at each connector. Ensure that all connections are properly secure.

> **CAUTION**
>
> Ensure that the interconnecting cables are free to move (not kinked or pinched). Be careful not to damage wires at any stage of the assembly process.

5. Raise the hinged backbox into position. Secure the backbox with mounting bolts through the bottom holes into the threaded fasteners in the cabinet.
6. Extend the rear leg levelers to approximately 2/3 length below the leg bottom. Remove the cabinet from its support and place it on the floor.
7. Remove the playfield cover glass to permit accurate measurement of the playfield level and pitch. Level (side-to-side) the playfield (preferably measured ON the playfield surface), and firmly tighten the nut on each leg leveler shaft to maintain this level setting, as shown in Figure 1.
8. Adjust the front leg levelers for proper playfield level (side-to-side) *and* playfield pitch angle (incline) of approximately 6 degrees. (Again, it is recommended that these measurements be made ON the playfield, not the cabinet nor the playfield cover glass.) Tighten the nut on each leg leveler shaft to maintain this setting.

> **CAUTION**
>
> Playfield pitch angle adjustments can affect the operation of the ball-roll tilt and the plumb bob tilt, inside the cabinet. The operator should adjust these tilt mechanisms for proper operation, after completion of the desired playfield pitch angle setting.

9. Move the game into the desired location; recheck the level and pitch angle of the playfield.
10. Verify that ***two*** balls are installed in the game.
11. Clean and re-install the playfield cover glass. Prepare the game for player operation.

GAME OPERATION

> ***WARNING***
>
> After assembly and installation at its site location, this game must be plugged into a properly grounded outlet to prevent shock hazard, and to assure proper game operation. DO NOT use a 'cheater' plug to defeat the ground pin on the line cord. DO NOT cut off the ground pin.

POWERING UP. With the coin door closed, plug the game in, and switch it ON, using the On-Off switch. In normal operation, the player 1 score display and the lower two 2-digit displays (Credits and BALL IN PLAY/MATCH) initially all show 00. The GAME OVER indicator blinks. Then, the game goes into the Attract Mode (Playfield and backbox lamps flashing, sounds being heard, etc.).

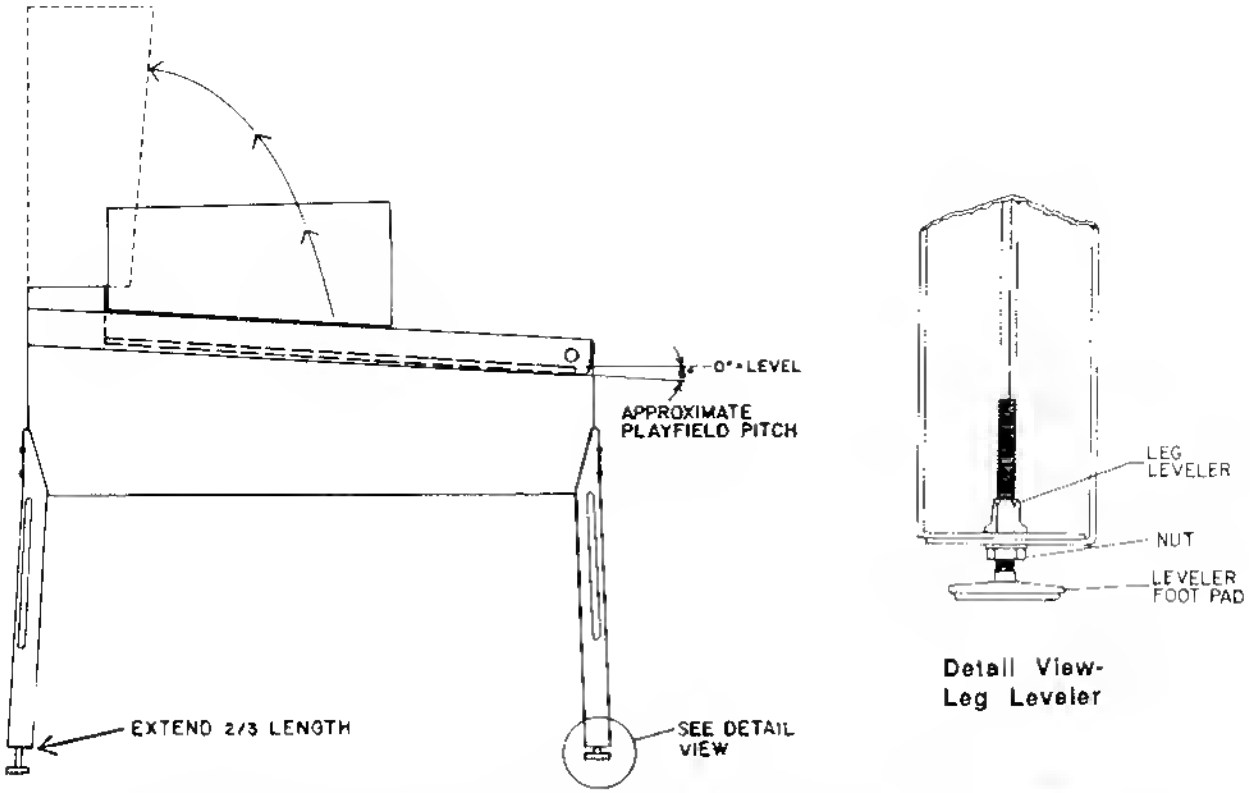

Figure 1. Pinball Assembly, Playfield Pitch Angle, and Leg Leveler Details.

GAME OPERATION (Continued)

CAUTION

PIN•BOT's System 11 game program has a new capability to aid the operator and service personnel. At game Turn-On (and also when the operator is beginning the Test/Diagnostic Procedures), a display now signals when a switch has NOT been actuated during ball play for 60 balls (20 games). Up to three switches can be displayed during this Switch Problem reporting activity. Moreover, *PIN•BOT* compensates the game play requirements affected by each disabled switch to allow 'nearly normal' play. This helps keep *PIN•BOT* earning good profits! More information is available in the Diagnostic Procedures text describing the Switch Testing.

ATTRACT MODE*. Playfield and backbox lamps blink. All player score displays exhibit a series of messages informing the player concerning:

A. Recent highest scores*;
B. A "custom message" ("GIVE ME SIGHT ... LOCK MY ... EYE BALLS.")*;
C. The score to achieve to obtain a Replay award*;
D. Brief game feature instructions.

These displays (or variations of them) reappear occasionally, accompanied by sounds and music, until a player initiates game play by inserting a coin or, when credits are available, pressing the Credit button.

CREDIT POSTING. Insert coin(s). A sound is heard for each coin, and the Credits display shows the number of credits purchased. So long as the number of maximum allowable credits* are *NOT* exceeded by coin purchase or high score, credits are posted correctly. However, after this maximum credits value is reached, posting of additional credits won (not purchased) by the player does *not* occur. ONLY posting of *purchased* credits occurs beyond the maximum credits value.

GAME OPERATION (Continued)

STARTING A GAME. Press the Credit button once. A startup sound plays, and the amount shown in the Credit display decreases by one. Player display 1 flashes (until the first playfield switch is actuated), and the BALL IN PLAY display shows 1. Additional players may enter the game by pressing the Credit button once for each player, before the end of play on the first ball.

TILT. Actuating the Slam Tilt switch on the coin door inside the cabinet ends the current game; *PIN•BOT* then proceeds to the Game Over Mode. With the actuation of the ball-roll or playfield tilt switches, or the third closure* of the plumb bob tilt switch, the player loses the remaining play of that ball, but can complete the game.

END OF GAME. All earned scores and bonuses are awarded. If a player's final score exceeds the specified value, the player receives a designated award for achieving the current highest score. A random digit set* appears in the MATCH display. Credit* may be awarded, when the last two digits of any player's score display (1 through 4) match the random digits of the MATCH display. Match, high score, and game over sounds are made, as appropriate.

GAME OVER MODE. The GAME OVER indicator lights. The player 1 and 2 score displays show **GAME OVER**. Then, the high scores flash on the appropriate player score displays. The game proceeds to the Attract Mode.

---

* - operator-adjustable feature

PIN•BOT GAME PLAY

Right Flipper Return & Eject

Right Flipper Return Lane flashes Eject value (Adj. for timed interval, or until made): 25K - 50K- 75K - Lites Extra Ball. Entering Eject Hole, when flashing, scores value and turns on light. Hitting Return Lane again flashes next value. Lighting Extra Ball lights one of four lower lanes (on Lane Change) for Extra Ball.

Jet Bumpers & "Energy Value"

Every hit on a Jet Bumper increases "Energy Value" by 2000; starting at 50,000, "Energy Value" carries over from ball to ball. Hitting flashing Drop Target raises Ramp and lights target to collect "Energy Value" for timed interval (Adj. 1 - 90 sec). "Energy Value" maximum is 500,000.

5-Bank Teeth & Right 5-Bank Targets

Hitting Teeth targets lights "Chest Panel" lamps vertically. Hitting Right 5-bank targets lights "Chest Panel" lamps horizontally. Lighting all 5 rows opens Visor and drops Teeth targets. "Eye" Eject Holes are now flashing to lock balls for Multi-Ball™. During Multi-Ball™, all scores are doubled (2X). Lighting all 5 rows a second time lights one Extra Ball light. Hitting target lit by flashing light bar (on 1st shot only) opens Visor automatically.

Ramp Shot Bonus Multiplier - Solar Value

Ramp shot advances Bonus X (Bonus Multiplier): 2X-3X-4X-5X. Every shot up the Ramp, when NOT lit, increases "Solar" value by 50K (Adj. 25K to 99K).Starting at 100K (up to 5 million max.), this feature carries over ball-to-ball, player-to-player, and game-to-game, until collected. During Multi-Ball™, locking one ball in Eye-Eject lights Ramp to "Collect Solar Value".

3-Bank Targets & Planets

Making 3-bank targets within time limit scores 25,000 and advances to next planet: Pluto - Neptune - Uranus - Saturn - Jupiter - Mars - Earth - Venus - Mercury - The SUN).

Left Flipper Return Lane

Left Flipper Return Lane lights lower right Bullseye (Adj. On, until made, or for timed interval) to advance Planets.

At Game Start, PIN•BOT selects a destination (planet) for the player. Reaching selected planet scores Special. Reaching The SUN lights lower right target for an additional Special (*and* a super light show). Planets score 20,000 each at Bonus Collect.

VORTEX VORTEX Hole values range from 5,000 (easy) to 20,000 (medium) to 100,000 (hard). Every ball shooter shot entering VORTEX multiplies Hole values, starting at X1 up to X10 for the tenth time, then back to X1. Examples: 50,000 = 5,000 X10; 200,000 = 20,000 X 10; 1 million = 100,000 X 10.

BONUS Bonus goes from 1,000 to 99,000 max., and is displayed when bonus is advanced, when ball drains, and also when a flipper button is held for a status report.

PIN•BOT GAME STATUS DISPLAYS

PIN•BOT utilizes a new format for the display of information concerning the game's bookkeeping and game play feature adjustment. Basically, three classes of information now become available to the game owner/ operator: Id (Identification); Au (Audit); Ad (Adjustment). Each of the underscored two-letter abbreviations for these classes appears in the Credits display, while the system microprocessor for the *PIN•BOT* game is displaying the items within each class in the status display mode.

Identification Information--Id

With the game turned on, the coin door open, and the AUTO-UP/MANUAL-DOWN switch in the AUTO-UP position, the operator can press the ADVANCE switch once, briefly. *PIN•BOT's* displays immediately change from the Attract Mode to the Game Status Display Mode. This is evident by the following display, shown in columnar form. The column headings refer to the various backbox displays. (Player display 3 does not appear in the listing because it remains blank):

Player 1	Player 2	Player 4	Credits	BALL IN PLAY/ MATCH
PIN•BOT		**549 L-x***	**Id**	**00**

* x - indicates ROM revision level; e.g., 1 is initial issue; 2, 3, etc. for later revisions.

The game is named in the player score 1 and 2 displays. The game's identification number and the ROM revision level appears in the player 4 display. The Credits display shows the status display mode in abbreviated form, *Id*. The BALL IN PLAY/MATCH display shows the status display mode item for this particular display.

Pressing ADVANCE once more causes the **Id 01** display to appear. This display describes which of the "Install" options is currently in effect. For example, if the YES option of the INSTALL FACTORY Adjustment Item (Ad 70) was last selected, *FACTORY SETTING* appears on the Player Score displays. Changing the setting of any other game adjustment item, after selecting the YES option for Ad 70 causes the display to change to *FACTORY ALTERED*. Similarly, if the operator selects the YES option for INSTALL HARD (Ad 65), the display indicates *HARD SETTING*. Changing a game adjustment item later then causes the display to show *HARD ALTERED*.

Audit Information--Au

While the AUTO-UP switch remains in the Up position, the operator can press the ADVANCE switch once, briefly, to begin the backbox displays of Audit (sometimes called "bookkeeping") Information. Forty-four audit entries are now available. Calculation of the various factors is no longer necessary because the *PIN•BOT* System 11's game program now performs all the mathematical factor computations. This information is intended to aid the owner/operator in evaluating how the game is performing in each location, by providing knowledge about which game features are receiving the most play. With this information, the owner/operator can determine whether adjusting the game features to other

settings will contribute to increased game earnings.

The operator can press the ADVANCE button once to view each Audit Information display item. To proceed more rapidly through this information, the operator only has to press and hold the ADVANCE button. If a desired item is passed, the operator can use the MANUAL-DOWN switch position with the ADVANCE button to back up to the desired item.

The ***PIN•BOT* Audit Table** lists the 44 items of the Audit Information portion of the *PIN•BOT* Game Status Displays. Presentation of this Audit Information again utilizes the player score displays; however, the player 1 and 2 displays are combined as a descriptive phrase. The light type below the table's column headings names the respective backbox displays where the information appears. Because the player 4 display contains information which depends on game play, only a few example entries are shown in the table. The Credits display shows *Au* for all 44 audit items, so its entry is omitted from the tabular listing. Detection of erroneous data affecting any of the counters used in these audit items causes the message, ERROR, to be displayed in the player 3 display, during display of any audit item associated with that particular counter. (The program does not analyze the cause of the error; it merely alerts the operator of the error's existence by the message.)

***PIN•BOT* Audit Table**

Audit Item (MATCH)	Descriptive Phrases (Player 1 and 2 Displays)	Audit Factor Value (Player 4)
01	Left Coins [chute next to coin door hinge]	432
02	Center Coins	0
03	Right Coins	398
04	Paid Credits	830
05	Total Plays	
06	Total Free (Total Free Plays)	
07	Percent Free (% Free Plays)	
08	Replay Awards	
09	Percent Replay (% Replay Awards)	
10	Special Awards	
11	Percent Special (% Special Awards)	
12	Match Awards	
13	HSTD (High Score to Date) Credits	
14	Percent HSTD (% HSTD Credits)	
15	Extra Balls	
16	Percent Ex. Ball (% Extra Balls)	
17	Av. Ball Time (Average Time in Seconds)	
18	Min. of Play (Minutes of Play)	
19	Balls Played	
20	Replay 1 Awards	
21	Replay 2 Awards	
22	Replay 3 Awards	
23	Replay 4 Awards	
24	1 Playr Games	
25	2 Playr Games	
26	3 Playr Games	
27	4 Playr Games	
28	Burn in Cycles	
29	D. T. Percent (% Compl. Timed Drop Target)	
30	Solar Percent (% Compl. Timed Solar Bonus)	
31	Energy Percent (% Awarded, Energy Bonus)	
32	S. Eject Percent (% Awarded, Timed Sngl. Ej. Hole Bonus)	
33	Reach Percent (% Awarded, Reach for Planet Bonus)	
34	Solar Awards (# of Solar Bonus Awards)	
35	Energy Awards (# of Energy Awards)	
36	Reach Awards (# of Reach for Planet Awards)	
37	Chest Ex. Ball (# of Ex. Balls started from Chest)	
38	S. Eject Ex. Ball (# of Ex. Balls started from Sngl. Ej. Hole)	
39	H. S. Reset Counter	
40	Aut. Pct. Data 1	
41	Aut. Pct. Data 2	
42	Aut. Pct. Data 3	
43	Aut. Pct. Data 4	
44	Aut. Pct. Data 5	

NOTE:

1. The numbers shown in this column for Items 1 through 4 are examples. Entries for all items depend on the amount of play; thus, they will vary from location to location.

Adjustment Information--Ad

At end of the Audit Information presentation, with the AUTO-UP switch in the Up position, the operator can press the ADVANCE button to proceed to the Adjustment Information portion of the *PIN•BOT* Game Status Displays.

The operator can press the ADVANCE button once to view each Adjustment Information display item. To proceed more rapidly through this information, the operator only has to press *and hold* the ADVANCE button. If a desired item is passed, the operator can use the MANUAL-DOWN switch position with the ADVANCE button to back up to the desired item.

***PIN•BOT* Game Adjustment Table**

Adjustment Item (MATCH)	Descriptive Phrases (Player 1 and 2 Displays)		Factory Setting (Player 4)
01	AUTO REPLAY (%) (or FIXED REPLAY SCORES) [1]		Learn10 (%)
02	REPLAY START (or REPLAY LEVEL 1) [1]		1,400,000
03	REPLAY LEVELS (or REPLAY LEVEL 2) [1]		01
04	(REPLAY LEVEL 3) [1]		OFF
05	(REPLAY LEVEL 4) [1]		OFF
06	REPLAY AWARD		Credit
07	SPECIAL AWARD		Credit
08	MATCH FEATURE		On
09	BALLS / GAME		03
10	TILT WARNING		03
11	MAXIMUM EX. BALL		04
12	MAXIMUM CREDITS		10
13	HIGHEST SCORES		On
14	BACKUP HI. SCR1		3,000,000
15	BACKUP HI. SCR 2		2,500,000
16	BACKUP HI. SCR 3		2,000,000
17	BACKUP HI. SCR 4		1,500,000
18	HI. SCR1 CREDITS		04
19	HI. SCR2 CREDITS		03
20	HI. SCR3 CREDITS		02
21	HI. SCR4 CREDITS		01
22	H. S. RESET EVERY (3,000 PLAYS) [2]		
23	FREE PLAY		NO
24	U.S.A. 1 COINAGE (1 COIN 1 PLAY) [2,3]		
25	LEFT UNITS		01
26	CENTER UNITS		04
27	RIGHT UNITS		01
28	UNITS/ CREDIT		01
29	UNITS/ BONUS		00
30	MINIMUM UNITS		00
31	SOLAR V. ADVANCE	[25,000 to 99,000]	50,000
32	BON. MULT. MEMORY	[YES = retained; NO = not retained]	NO
33	S. EJECT MEMORY	[YES = retained; NO = not retained]	YES
34	PLANETS MEMORY	[YES = retained; NO = not retained]	YES
35	EX. BALL MEMORY	[YES = retained; NO = not retained]	YES
36	CHEST MEMORY	[YES = retained; NO = not retained]	YES
37	D. T. AUTO AD.	[1% - 90%; or NO auto adjust]	20%
38	D. T. TIMER	[1 - 90 sec., or Untimed]	15 sec
39	SOLAR AUTO AD.	[1% - 90%; or NO auto adjust]	20%
40	SOLAR TIMER	[1 - 90 sec; or Untimed]	20 sec

The ***PIN·BOT* Game Adjustment Table** lists the 70 items of the Adjustment Information portion of the *PIN·BOT* Game Status Displays. Presentation of the displays is similar to that for the Audit Information (that is, the player 1 and 2 displays combine as a descriptive phrase; the light type below the column headings names the respective backbox displays where the information appears, etc.). The Credits display shows *Ad* for all 70 adjustment items, so its entry is omitted from the tabular listing.

***PIN·BOT* Game Adjustment Table** (Continued)

Adjustment Item (MATCH)	Descriptive Phrases (Player 1 and 2 Displays)		Factory Setting (Player 4)
41	ENERGY AUTO AD.	[1% - 90%; or NO auto adjust]	40%
42	ENERGY TIMER	[1 - 90 sec., or Untimed]	15 sec
43	S. EJECT NO AUTO	[1% - 90%; or NO auto adjust]	No auto
44	S. EJECT UNTIMED	[1 - 90 sec., or Untimed]	Untimed
45	REACH AUTO AD.	[1% - 90%; or NO auto adjust]	4%
46	REACH PLANET	[Pluto - Mercury; Off]	JUPITER
47	CONSOL. EX. BALL	[YES; NO]	YES
48	A. MODE SOUNDS	[ALOT; LESS; NONE]	ALOT
49	CUSTOM MESSAGE [4]		ON
50	SW. ALARM KNOCKER		YES
51	ENGLISH TEXT		
52	UNUSED ADJUST		
53 [5]	INSTALL GERMAN 1 [6]		
54 [5]	INSTALL GERMAN 2 [6]		
55 [5]	INSTALL GERMAN 3 [6]		
56 [5]	INSTALL GERMAN 4 [6]		
57 [5]	INSTALL GERMAN 5 [6]		
58 [5]	INSTALL GERMAN 6 [6]		
59 [5]	INSTALL ADDABALL		NO
60 [5]	INSTALL 5-BALL		NO
61 [5]	INSTALL NOVELTY		NO
62 [5]	INSTALL EX. EASY		NO
63 [5]	INSTALL EASY		NO
64 [5]	INSTALL MEDIUM		NO
65 [5]	INSTALL HARD		NO
66 [5]	INSTALL EX. HARD		NO
67	AUTO BURN-IN		NO
68	CLEAR COINS		NO
69	CLEAR AUDITS		NO
70	INSTALL FACTORY [7]		NO

NOTES:

1. Automatic Replay percentage value range is adjustable from 5 to 50%, via the Credit button. Item 02 permits changing the factory setting value for Replay Start Level (valid for next 500 games played). Item 03 permits setting up to four replay levels, with values as detailed in text describing item 03.

   For Fixed Replay Scores, set Auto Replay value to 1 less than 5(%) via the Credit button. Go to items 02, 03, 04, and 05 to install their replay level scores. Turn off any replay score level by setting 00 as its value.

2. Phrase in parentheses is Factory Setting. Phrase appears in (player) 3 and 4 displays. Press Credit button to change setting of item 22, or the game pricing of item 24.

3. To change country OR coinage setting, press Credit button to obtain 16 Standard settings, followed by a Custom Setting. The Custom Setting activates items 25 through 30. When a Standard Setting is used, items 25 through 30 are set automatically, and cannot be changed.

4. To install Custom Message, press flipper button for alphabet and special characters. Press Credit button for next message letter or character.

5. Special Preset Adjustment, whose effects are noted in the Game Adjustment text.

6. Refer to **Pricing Table** and Game Adjustment text describing these items.

7. Approximates Ad 64, yet includes all factors listed in Factory Setting column, not just Ad 31 through 47 provided by Ad 64.

GAME ADJUSTMENT PROCEDURE

Adjustment Items 01 through 70

The coin door must be open to access the Game Adjustment/Diagnostic switches. All readings and adjustments require operation of these coin door switches. Some adjustments utilize the Credit button; some also use the flipper button(s). Additional text describing the game adjustment items follows this procedure.

1. Use AUTO-UP and press ADVANCE. The BALL IN PLAY/MATCH display initially indicates **Ad 01.** The player 1 and 2 score displays indicate AUTO REPLAY. The player 3 display shows PERCENT. If the factory setting has not been changed, the player 4 display shows LEARN10, indicating the setting of a 10% replay percentage. (The "Learn" feature causes the game program to adjust itself automatically, as discussed in the following text concerning the 'details' about Adjustment Item 01.)

2. To reach a higher item number (in the BALL IN PLAY/MATCH display), use AUTO-UP and press ADVANCE. To return to a previous item number, use MANUAL-DOWN and press ADVANCE.

3. With the desired item number (refer to the ***PIN•BOT*** **Game Adjustment Table**) showing in the BALL IN PLAY/MATCH display, increase the value (or select another option) shown in the player 4 display by using AUTO-UP and pressing the Credit button. Repeat this step for each item, until all adjustments have been made.

   (The same procedure can be used for Audit Items. To zero **Au 01 - 04** (concerning the coin chutes and the total coins), the operator can proceed to item 68, Clear Coins, and press the Credit button to obtain the YES option. The operator then presses the ADVANCE button and notes the "COINS CLEARED" display, which verifies that the entry values for items 01 through 04 of the Audit Items are now reset to zero.)

   For example, the operator may desire to change the degree of game play difficulty from the Factory Setting (equivalent to the Install Medium [Ad 64] difficulty, along with a number of other automatically installed settings, as shown in the right column of the **Game Adjustment Table**) to another difficulty more suitable for the players at a particular game site. Four other 'automatic' play difficulty settings (Ad 62 - Ad 66) are available, each of which, if selected, installs all the adjustments listed for that item in the following 'details' text.

4. To proceed rapidly through the entire adjustments series, press *and hold* ADVANCE, until **Ad 70** shows in the BALL IN PLAY/MATCH display. From item 70, you can: (A) return to the Game-Over Mode; or (B) restore factory settings and zero audit (bookkeeping) totals. Perform either of the following, as desired:

   A. To reach Game-Over Mode, use AUTO-UP and press ADVANCE once. *PIN•BOT* now goes to the Game-Over Mode.

   B. To restore factory settings, zero all audit (bookkeeping) totals, *and* return to Game-Over Mode, use AUTO-UP or MANUAL-DOWN to display item 70 in the BALL IN PLAY/MATCH display. Press the Credit button to display the YES option in the player 4 display. Using AUTO-UP, press ADVANCE once. *PIN•BOT* now zeroes ALL audit totals and changes ALL game adjustments back to those originally selected as Factory Settings. It then shows the operator a message ("FACTORY SETTING") that this has occurred. (A problem in the Memory Protection circuit or closing the coin door will cause the message "ADJUST FAILURE" to appear.) Press ADVANCE once more to return to the Game-Over Mode.

Details of Adjustment Items 01 through 70

01 Auto Replay (or Fixed Replay)

Of the two options, AUTO REPLAY is the Factory Setting. The percentage of replays automatically awarded has a Factory Setting of *LEARN 10%* (German games have a Factory Setting of *LERNE 15%*). The *LEARN* mode aids a game's initial installation by causing the game program

01 Auto Replay (or Fixed Replay) (Continued)
to compare the value of the Replay Level to the player's score 16 times during the first 800 games. At each comparison, the program increases (or decreases) the Replay Level by 100,000 to achieve the replay percentage specified either via the factory setting or later operator adjustment. (After the first 800 games, the comparison occurs after every 500 games.) Use the Credit button to change the percentage within the range of *LEARN 5* to *LEARN 50* (%), followed by *5%* to *50%* ,with the value increasing using AUTO-UP (or decreasing using MANUAL-DOWN). The next Credit button change beyond 50%, or below LEARN 5%, selects the FIXED REPLAY option.

For AUTO REPLAY, Ad 02 provides the Starting Replay Level (player 1 and 2 displays show REPLAY START). Ad 03 provides the number of replay levels (01, 02, 03, or 04). *PIN•BOT* then proceeds to Ad 06 automatically.

For FIXED REPLAY, Ad 02 is the first replay level (REPLAY LEVEL 1). Ad 03, 04, and 05 are the other replay levels.

02 Starting Replay Level (or Replay Level 1)
For AUTO REPLAY (refer to Ad 01), the Factory Setting is 1,400,000 (German games have a Factory Setting of 1,000,000). The range of settings is *800,000* through *2,000,000* (by increments of 100,000 with AUTO-UP or decrements of 100,000 with MANUAL- DOWN).

For FIXED REPLAY, the operator can enter the value to be used for the first fixed replay score level via the Credit button. The range of settings is: *OFF; 100,000* through *9,900,000* (by increments of 100,000 with AUTO-UP, or decrements of 100,000 with MANUAL-DOWN).

03 Replay Levels (or Replay Level 2)
For AUTO REPLAY (refer to Ad 01), the Factory Setting is 01 (one replay level). The option range is *one, two, three, or four* replay level(s). When the operator chooses two replay levels, *PIN•BOT* automatically adjusts the second replay level to be twice the value selected for Ad 02, the starting replay level. Choosing three or four replay levels automatically adjusts their replay levels to three times or four times the Ad 02 value.

For FIXED REPLAY, the technique of value entry and the range of settings are identical to those of Ad 02.

04 (Replay Level 3)
For AUTO REPLAY, this Adjustment item is not applicable. *PIN•BOT* automatically bypasses this adjustment.

For FIXED REPLAY, the technique of value entry and the range of settings are identical to those of Ad 02.

05 (Replay Level 4)
For AUTO REPLAY, this Adjustment item is not applicable. *PIN•BOT* automatically bypasses this adjustment.

For FIXED REPLAY, the technique of value entry and the range of settings are identical to those of Ad 02.

06 Replay Award
For either AUTO REPLAY or FIXED REPLAY (Ad 01), the operator can select the form of the award automatically provided when the player exceeds any Replay Level (Automatic or Fixed). The choices are:

Credit - Reaching each replay level obtains a credit (free game). This is the Factory Setting.

06 Replay Award (Continued)

Ball - Reaching each replay level obtains an extra ball.

Audit - Reaching each replay level obtains nothing to the player; it does increase the entry valueot the Audit Item(s) maintaining a tally of these awards (Au 08, and Au 20 through 23, as applicable).

Coil - Reaching each replay level causes the Knocker coil to activate once per free play won (instead of awarding a credit for each level exceeded).

NOTE

A ticket dispenser or token dispenser can be activated by the Knocker coil driver to provide an alternative award for each free play achieved by the player.

07 Special Award

The operator can select the torm of the award automatically provided when the player scores a Special. The choices are:

Credit - Scoring each Special, when lit, obtains a credit (free game). This is the Factory Setting. A variation to this award occurs, when the setting ot Ad 06 is Coil. (This permits a ticket or token dispenser to provide the award, when applicable.)

Ball - Scoring each Special, when lil, obtains an extra ball.

Score - Scoring each Special, when lil, obtains a score advance of 100,000 points to the player.

08 Match Award

The operator can select whelher the Malch aclion occurs at completion of each game. The choices are:

On - This is the Factory Setting. The game selects a random two-digit number at end of game and compares each player's score for an identical two digits in the rightmost two positions. A malching of the two digits resulls in the award of a credit (or a tickel/token, if a dispenser is attached, and the setting of Ad 06 is Coil).

Off - The MATCH display does nol operale al completion of the game; no award is given.

09 Balls / Game

The operator can define a "game" by specifying the number of balls to be played. The Factory Setting is 3. The range of settings is *1* through *9*.

10 Tilt Warning

The operator can specify the allowable number of total actuations of the plumb bob and playfield tilt mechanisms that can occur before the game is "tilted". The range of this setting is *1* through *5*. The Factory Setting is 3.

11 Maximum Extra Ball

The operator can specity the maximum number of Extra Balls to be accumulated at any time. The range of this setting is *00* (which allows NO extra ball play, and displays a message, NO EX. BALL) and *1* through *9*. The Factory Setting is 4.

12 Maximum Credits

The operator can specity the maximum number ol credits the game can accumulate, either through game play awards or coin purchases. The range ot settings is *5* through *99*. The Factory Setting is 10 (Factory Setting for German games is 30). Reaching the specitied setting prevents the award of additional credits by game play. Coin purchases do continue to accumulate and are displayed.

12 Maximum Credits (Continued)

NOTE

Whenever the number of credits is less than the specified maximum credits, any credits obtained by coin purchase or game awards (High Score, Match, Replay Levels, etc.) will be accumulated even though they exceed the maximum value. Thereafter, no additional credits can be accumulated, until the credit total is reduced below the specified maximum setting.

13 Highest Scores

The operator can allow the game to maintain a record of the four highest scores achieved to date. The Factory Setting is On. The optional alternative is *Off*, which deactivates this adjustment item.

14 Backup High Score 1

The operator can set the Backup High Score value in the player 1 score display, using the Credit button. The Factory Setting is 3,000,000. The game automatically restores the value set, when the operator presses, and holds, the HIGH SCORE RESET switch, or when an automatic High Score Reset event (Ad 22) occurs.

15 Backup High Score 2

This adjustment is similar to Ad 14, except that this applies to the player 2 score display. The adjustment technique is identical to Ad 14. The Factory Setting is 2,500,000. It is also restored as described for Ad 14.

16 Backup High Score 3

This adjustment is similar to Ad 14, except that this applies to the player 3 score display. The adjustment technique is identical to Ad 14. The Factory Setting is 2,000,000. It is also restored as described for Ad 14.

17 Backup High Score 4

This adjustment is similar to Ad 14, except that this applies to the player 4 score display. The adjustment technique is identical to Ad 14. The Factory Setting is 1,500,000. It is also restored as described for Ad 14.

18 Credits for Highest Score 1

The operator can select the number of credits to be awarded, by using the Credit button, whenever a player exceeds the previous Highest Score. The range of this setting is *00* through *10*. The Factory Setting is 04. A variation to this award occurs, when the setting of Ad 06 is Coil. (This permits a ticket or token dispenser to provide the award, when applicable.)

19 Credits for Highest Score 2

This adjustment is similar to Ad 18, except that this applies to the player's exceeding the second highest score. The Credit button adjustment technique is the same as for Ad 18. The range of this setting is *00* through *03*. The Factory Setting is 03.

20 Credits for Highest Score 3

This adjustment is similar to Ad 18, except that this applies to the player's exceeding the third highest score. The Credit button adjustment technique is the same as for Ad 18. The range of this setting is *00* through *03*. The Factory Setting is 02.

21 Credits for Highest Score 4

This adjustment is similar to Ad 18, except that this applies to the player's exceeding the fourth highest score. The Credit button adjustment technique is the same as for Ad 18. The range of this setting is *00* through *03*. The Factory Setting is 01.

22 Automatic High Score Reset

The operator can specify (via Credit button) that the game will provide an automatic reset of the displayed "Highest Scores", and the number of games to be played before the reset occurs. The values provided upon reset are those selected by the operator in Ad 14 through 17, the Backup High Scores. The range of this setting is *Off* (to disable this adjustment), and *1,000* to *99,000* games (in increments of 1,000). The Factory Setting is 3,000. (Audit item 39 displays the number of games remaining before the reset.)

23 Free Play

The operator can select (via the Credit button) whether a player can operate the game without a coin (free play) or with a coin. The optional alternatives are *No* (a coin is necessary) or *Yes* (game play is free; no coin is required). The Factory Setting is No.

24 Coinage Selections

The operator can specify (via the Credit button) any of the 16 Standard Settings for game pricing, each of which exhibits a message identifying the country and the number of coins required and the number of games that the coin requirement purchases. Choosing a Standard Setting permits the game to omit items Ad 25 through 30,which are adjustments allowing for a special custom coinage setting. The Factory Setting is U.S.A. 1 : 1 COIN 1 PLAY, as shown by the backbox display.

Following the last Standard Setting is a Custom Coinage Setting, which allows the operator to utilize Ad 25 through 30 in establishing a special coinage setting. A message, CUSTOM COINAGE, indicates that the operafor can enter the appropriate values into the Ad 25 through 30 adjustmenf ifems.

The values for Ad 25 through 30 of each Standard Setting, as well as other possible values for the Custom Coinage Setting are shown in the **Pricing Table.**

25 Left Chute Coin Units

The operator can specify (via the Credit button) the number of coin units purchased by a coin passing through the left coin chute.

26 Center Chute Coin Units

The operator can specily (via the Credit button) the number of coin units purchased by a coin passing through fhe center coin chute.

27 Right Chute Coin Units

The operator can specify (via the Credit button) the number of coin units purchased by a coin passing through the right coin chute.

28 Units Required for Credit

The operator can define (via the Credit button) the number of coin units required to obtain 1 Credit. A coin unit counter in the game program totals the number of coin units purchased through all coin chutes prior to each game. tt the totat number of coin units purchased exceeds the 1 Credit factor by a multiple (or more, coin units) of the specified Units per Credit value, the Credits display shows the proper number of Credits. The coin unit counter retains any remaining coin units, until the start of a game; then, the coin unit counter is cleared (its contents are zeroed). The Factory Setting is 01.

29 Units Required for Bonus

The operator can specify (via the Credit button) that 1 additional Credit is to be indicated in the Credits display, when a certain number of coin units are accumulated. The Factory Setting is 00.

30 Minimum Units Required for any Credits Posted
The operator can specify that NO Credits are to be posted (indicated in the Credits display), until the credit units counter reaches a particular value. The Factory Setting is 00.

31 Solar Value Advance
The operator can choose (via the Credit button) the value by which the Solar Value is increased. The range of this setting is *25,000* to *99,000*. The Factory Setting is 50,000.

32 Bonus Multiplier Memory
The operator can choose (via the Credit button) whether the bonus multipliers are stored in memory for the 'next ball'. The choices are *No* (Lamps are turned off at the start of a ball) or *Yes* (Lamps are stored and recalled for the player's next ball. The Factory Setting is No.

33 Single Eject Hole Memory
The operator can choose (via the Credit button) whether the lamps from the Single Eject Hole are stored in memory for the 'next ball'. The choices are *No* (Lamps are turned off at the start of a ball) or *Yes* (Lamps are stored and recalled for the player's next ball). Note, lighting Extra Ball is more difficult, if there is NO memory. The Factory Setting is Yes.

34 Planets Memory
The operator can choose (via the Credit button) whether the Planet lamps are stored in memory for 'next ball' play. The choices are *No* (Lamps are turned off at the start of a ball) or *Yes* (Lamps are stored and recalled for the player's next ball). Note, getting the Special and lighting the Special is more difficult, if there is NO memory. The Factory Setting is Yes.

35 Extra Ball Memory
The operator can choose (via the Credit button) whether the Extra Ball lamps are stored in memory for 'next ball' play. The choices are *No* (Lamps are turned off at the start of a ball) or *Yes* (Lamps are stored and recalled for the player's next ball). Note, getting to shoot again is more difficult, if there is NO memory. The Factory Setting is Yes.

36 Chest Memory
The operator can choose (via the Credit button) whether the Chest Panel lamps, which open the visor, are stored in memory for 'next ball' play. The choices are *No* (Lamps are turned off at the start of a ball) or *Yes* (Lamps are stored and recalled for the player's next ball). Note, opening the visor to get Multi-Ball™ is more difficult, if there is NO memory. The Factory Setting is Yes.

37 Drop Target Auto Adjustment
The operator can choose (via the Credit button) what percentage award is earned from the 3-bank Drop Target. The range of this automatic adjustment setting is *1%* (Hard) through *90%* (Very easy); it can also be turned off (disabled). When the automatic adjustment is turned on (enabled), the game program adjusts the setting, at the end of a game after 50 misses or awards, except when the current value is within 2% of the setting. Then, no auto adjustment occurs. The current setting can be viewed by accessing Audit Item Au 29. The Factory Setting is enabled and 20%.

38 Drop Target Timer
The operator can choose (via the Credit button) the degree of difficulty, via a timer setting, for the 3-bank Drop Target. This setting affects the advancement through the planets and the awarding of Special. The range of this setting is *1 second* (Hard) through *90 seconds* (Very easy); it can also be *Untimed* (via a setting of *0*). Be aware that, if this is auto adjusted, the setting is merely the initial, or current, setting. The Factory Setting is 15 seconds.

39 Solar Auto Adjustment
The operator can choose (via the Credit button) what percentage award is earned from the Solar value. The range of this automatic adjustment setting is *1%* (Hard) through *90%* (Very easy); it

39 Solar Auto Adjustment (Continued)
can also be turned ott (disabled), via a setting ot *0*. When the automatic adjustment is turned on (enabled), the game program adjusts the setting, at the end of a game after 50 misses or awards, except when the current value is within 2% of the setting. Then, no auto adjustment occurs. The current setting can be viewed by accessing Audit Item Au 30. The Factory Setting is Enabled and 20%.

40 Solar Timer
The operator can choose (via the Credit button) the degree ot difficulty, via a timer setting, tor the Solar value. This value increases by going on the ramp when the Score Solar lamp is not lit. The range of this setting is *1 second* (Hard) through *90 seconds* (Easy); it can also be *Untimed* (via a setting of *0*) for an Extremely Easy condition. Be aware that, if this is auto adjusted, the setting is merely the initial, or current, setting. The Factory Setting is 20 seconds.

41 Energy Auto Adjustment
The operator can choose (via the Credit button) what percentage award is earned from the Energy value. The Energy value increases via Jet Bumper scoring. The range ot this automatic adjustment setting is *1%* (Hard) through *90%* (Very easy); it can also be turned off (disabled), via a setting of *0*. When the automatic adjustment is turned on (enabled), the game program adjusts the setting, at the end ot a game, after 50 misses or awards, except when the current value is within 2% of the setting. Then, no auto adjustment occurs. The current setting can be viewed by accessing Audit Item Au 31. The Factory Setting is Enabled and 40%.

42 Energy Timer
The operator can choose (via the Credit button) the degree of difficulty, via a timer setting, for the Energy value. This value increases by Jet Bumper scoring. The range of this setting is *1 second* (Hard) through *90 seconds* (Easy); it can also be *Untimed* (via a setting of *0*) for an Extremely Easy condition. Be aware that, if this is auto adjusted, the setting is merely the initial, or current, setting. The Factory Setting is 15 seconds.

43 Single Eject No Adjust
The operator can choose (via the Credit button) what percentage award is earned from the Single Eject Hole, which awards an Extra Ball. The range of this automatic adjustment setting is *1%* (Hard) through *90%* (Very easy); it can also be turned off (disabled), via a setting of *0*. When the automatic adjustment is turned on (enabled), the game program adjusts the setting, at the end ot a game, after 50 misses or awards, except when the current value is within 2% ot the setting. Then, no auto adjustment occurs. The current setting can be viewed by accessing Audit Item Au 32. The Factory Setting is disabled (NO AUTO).

44 Single Eject Untimed
The operator can choose (via the Credit button) the degree of difficulty, via a timer setting, tor the Single Eject Hole. This hole awards an Extra Ball. The range ot this setting is *1 second* (Hard) through *90 seconds* (Easy); it can also be *Untimed* (via a setting of *0*) tor an Extremely Easy condition. Be aware that, it this is auto adjusted, the setting is merely the initial, or current, setting. The Factory Setting is Untimed.

45 Reach Auto Adjustment
The operator can choose (via the Credit button) what percentage award is earned from the 'Reach planet' for Special. The range of this automatic adjustment setting is *1%* (Hard) through *90%* (Very easy); it can also be turned off (disabled), via a setting of *0*. When the automatic adjustment is turned on (enabled), the game program adjusts the setting, at the end of a game, after 50 misses or awards, except when the current value is within 2% of the setting. Then, no auto adjustment occurs. The current setting can be viewed by accessing Audit Item Au 33. The Factory Setting is enabled and 4%.

46 Reach Planet

The operator can choose (via the Credit button) the degree of difficulty for the 'Reach Planet" to earn the Special. The range of this setting is *Pluto* (Very easy) through *Mercury* (Hard); it can also be turned *Off* for a No 'Reach Planet' Special. Be aware that, if this is auto adjusted, the setting is merely the initial, or current, setting. The Factory Setting is Jupiter.

47 Conaolation Extra Ball

The operator can choose (via the Credit button) whether the player gets an Extra Ball lamp lighted on the final ball. This award is for less skilled players. To obtain the Consolation Extra Ball, the player, on his last ball: (a) must have an average ball time of less than 35 seconds; (b) can NOT have any 'Shoot Again' awards on the last ball; (c) can NOT have lighted any Extra Ball lamps; and (d) this adjustment's setting must be Yes. The choices are *No* (No Consolation Extra Ball award) or *Yes* (Award the Consolation Extra Ball. The Factory Setting is Yes.

48 Attract Mode Sounds

The operator can select (via the Credit button) the amount of sounds occurring during the Attract Mode. The choices are:

ALOT - Sounds occur during the Rules display and the Attract Mode sequence.
LESS - Sound occur during only the Attract Mode.
NONE - No sounds occur during the Attract Mode. The Factory Setting is ALOT.

49 Custom Message

The operator can choose (via the Credit button) whether to display a message during the Attract Mode. (When display of a message is selected, the operator can either utilize the message provided or change the message.) Three choices are available:

1 - Display a message during the Attract Mode. The player 4 display shows this choice as ON. This is the Factory Setting. The 3-line message provided is:
GIVE ME SIGHT ... LOCK MY ... EYE BALLS.

2 - Do NOT display a message during the Attract Mode. (Player 4 shows OFF.)

3 - The player 4 display shows this choice as CHANGE. The operator can enter a speciel ("custom") message, as follows:

A. Press ADVANCE once. The operator can now enter as many as three 14-character lines for display during the Attract Mode.

B. Use the flipper button(s) to select each message character (alphabel, numbers, and special symbols are available). In case of error, enter a "back arrow" (just before "space") to correct, followed by correct character. For a period after any letter, use letters with periods (following the special symbols). The entire character set is the following:

A B C D E F G H I J K L M N O P O R S T U V W X Y Z 0 1 2 3 4 5 6 7 8 9 < > ? - / * '
A. B. C. D. E. F. G. H. I. J. K. L. M. N. O. P. O. R. S. T. U. V. W. X. Y. Z. _

C. Move to the next character via the Credit button. No entirely blank lines will be displayed.

50 SW. ALARM KNOCKER

The operator can choose (via the Credit button) whether the knocker operates, sounding an alarm to signal a switch problem, at the time of game Turn-On and at the beginning of the Test/Diagnostic Procedures. Two choices are available:

YES - The knocker sounds, signalling a switch problem, at game Turn-On and at the beginning of the Test/Diagnostic Procedures. This is the Factory Setting, and is shown in the player 4 display.

NO - The knocker does NOT sound. (Player 4 shows NO.)

51 ENGLISH TEXT

The operator can choose to display the message, audit, adjustment, and Test /Diagnostic information in English or German (Deutsch) via the Credit button.

52 UNUSED ADJUST

This adjustment is not used for *PIN•BOT*.

SPECIAL PRESET ADJUSTMENTS CAUTION

Adjustments 53 through 66 are Special Preset Adjustments to enable the operator to perform the setting of multiple adjustments at once. They permit the operator to: (1) modify a game for a specific area (special German coinage settings, for example, Ad 53 through 58); (2) change a group of adjustments to conform with laws of certain localities (Ad 59 through 61); and (3) to change the degree of difficulty of game play (Ad 62 through 66). A list of the preceding individual Adjustments affected accompanies each of these Special Preset Adjustments. Whenever the operator chooses to use any Special Preset Adjustment, the operator can later access any or all of the individual Adjustments affected by that Special Adjustment for subsequent changes.

A similar technique is recommended in the event of error or uncertainty concerning any Special Preset Adjustment, after the operator selects it: The operator can restore the factory setting of each individual Adjustment, then select the desired Special Preset Adjustment, and then return to any of the preceding individual adjustments to determine whether use of the Special Adjustment has had the desired effect.

The Backbox displays for each Special Preset Adjustment indicate whether the operator has selected it, by identifying the Adjustment in the player 1 and 2 displays by name and the selection choice of NO, meaning Not Selected (this is the Factory Setting), or YES, meaning Selected, in the player 4 display. Selection occurs by using the Credit button to choose YES and then pressing ADVANCE.

NOTE

Games in which the CPU jumper W7 is cut ("German games") automatically have certain Adjustment Items preset:

Ad	Name	New Setting
01	Auto Replay	Lerne15 (%)
02	Replay Start	1,400,000
03	Replay Levels	3
12	Maximum Credits	30
14	Backup Hi Scr 1	2,500,000
15	Backup Hi Scr 2	2,000,00

Ad	Name	New Setting
16	Backup Hi Scr 3	1,500,000
17	Backup Hi Scr 4	1,000,000
18	Hi Scr 1 Credits	03
19	Hi Scr 2 Credits	00
20	Hi Scr 3 Credits	00
21	Hi Scr 4 Credits	00
22	Hi Scr Reset	00
24	German 1 Coinage	10 Plays/5DM
51	Deutsch Text	Deutsch

53 Install German 1

The operator can modify the game pricing selection of Standard Setting 09 in the **Pricing Table** to permit Credit Award play with 10 games for 5 DM. Individual Adjustments are affected, as follows:

Ad	Name	New Setting
06	Replay Award	Credit
07	Special Award	Credit
08	Match Feature	On
14	Backup Hi Scr 1	2,500,000
15	Backup Hi Scr 2	2,000,000
16	Backup Hi Scr 3	1,500,000

Ad	Name	New Setting
17	Backup Hi Scr 4	1,000,000
18	Hi Scr 1 Credits	03
19	Hi Scr 2 Credits	00
20	Hi Scr 3 Credits	00
21	Hi Scr 4 Credits	00
24	German 1 Coinage	10 Plays/5DM

54 Install German 2

The operator can modify the game pricing selection of Standard Setting 09 in the **Pricing Table** to permit Ticket/Token operation with 10 games for 5 DM. Individual Adjustments are affected, as follows:

54 Install German 2 (Continued)

Ad	Name	New Setting	Ad	Name	New Setting
06	Replay Award	Coil	17	Backup Hi Scr 4	1,000,000
07	Special Award	Ball	18	Hi Scr 1 Credits	03
08	Match Feature	On	19	Hi Scr 2 Credits	00
14	Backup Hi Scr 1	2,500,000	20	Hi Scr 3 Credits	00
15	Backup Hi Scr 2	2,000,000	21	Hi Scr 4 Credits	00
16	Backup Hi Scr 3	1,500,000	24	German 1 Coinage	10 Plays/5DM

55 Install German 3

The operator can modify the game pricing selection of Standard Setting 09 in the **Pricing Table** to permit Keyset Mode operation with 10 games for 5 DM. Individual Adjustments are affected, as follows:

Ad	Name	New Setting	Ad	Name	New Setting
06	Replay Award	Audit	17	Backup Hi Scr 4	00
07	Special Award	Score	18	Hi Scr 1 Credits	00
08	Match Feature	Off	19	Hi Scr 2 Credits	00
14	Backup Hi Scr 1	00	20	Hi Scr 3 Credits	00
15	Backup Hi Scr 2	00	21	Hi Scr 4 Credits	00
16	Backup Hi Scr 3	00	24	German 1 Coinage	10 Plays/5DM

56 Install German 4

The operator can modify the game pricing selection of Standard Setting 09 in the **Pricing Table** to permit Credit Award play with 6 games for 5 DM. Individual Adjustments are affected, as follows:

Ad	Name	New Setting	Ad	Name	New Setting
06	Replay Award	Credit	17	Backup Hi Scr 4	1,000,000
07	Special Award	Credit	18	Hi Scr 1 Credits	03
08	Match Feature	On	19	Hi Scr 2 Credits	00
14	Backup Hi Scr 1	2,500,000	20	Hi Scr 3 Credits	00
15	Backup Hi Scr 2	2,000,000	21	Hi Scr 4 Credits	00
16	Backup Hi Scr 3	1,500,000	24	German 2 Coinage	6 Plays/5DM

57 Install German 5

The operator can modify the game pricing selection of Standard Setting 09 in the **Pricing Table** to permit Ticket/Token operation with 6 games for 5 DM. Individual Adjustments are affected, as follows:

Ad	Name	New Setting	Ad	Name	New Setting
06	Replay Award	Coil	17	Backup Hi Scr 4	1,000,000
07	Special Award	Ball	18	Hi Scr 1 Credits	03
08	Match Feature	On	19	Hi Scr 2 Credits	00
14	Backup Hi Scr 1	2,500,000	20	Hi Scr 3 Credits	00
15	Backup Hi Scr 2	2,000,000	21	Hi Scr 4 Credits	00
16	Backup Hi Scr 3	1,500,000	24	German 2 Coinage	6 Plays/5DM

58 Install German 6

The operator can modify the game pricing selection of Standard Setting 09 in the **Pricing Table** to permit Keyset Mode operation with 6 games for 5 DM. Individual Adjustments are affected, as follows:

58 Install German 6 (Continued)

Ad	Name	New Setting	Ad	Name	New Setting
06	Replay Award	Audit	17	Backup Hi Scr 4	00
07	Special Award	Score	18	Hi Scr 1 Credits	03
08	Match Feature	Off	19	Hi Scr 2 Credits	00
14	Backup Hi Scr 1	00	20	Hi Scr 3 Credits	00
15	Backup Hi Scr 2	00	21	Hi Scr 4 Credits	00
16	Backup Hi Scr 3	00	24	German 2 Coinage	6 Plays/5DM

59 Install Add-A-Ball

The operator can utilize this option to delete all Free Play awards and replace them with Extra Ball awards. Individual Adjustments are affected, as follows:

Ad	Name	New Setting	Ad	Name	New Setting
06	Replay Award	Ball	19	Hi Scr 2 Credits	00
07	Special Award	Ball	20	Hi Scr 3 Credits	00
08	Match Feature	Off	21	Hi Scr 4 Credits	00
18	Hi Scr 1 Credits	00			

60 Install 5 Ball

The operator can change the game to 5-Ball play, including the changing of certain features to the recommended 5-Ball play difficulty level. Individual Adjustments are affected, as follows:

Ad	Name	New Setting
02	Replay Start	3,500,000
09	Balls / Game	05

61 Install Novelty

The operator can remove all Free Play and Extra Ball awards. Individual Adjustments are affected, as follows:

Ad	Name	New Setting	Ad	Name	New Setting
01	Fixed Replay		08	Match Feature	Off
02	Replay Level 1	Olf	11	No Extra Ball	No
03	Replay Level 2	Off	18	Hi Scr 1 Credits	00
04	Replay Level 3	Oft	19	Hi Scr 2 Credits	00
05	Replay Level 4	Oft	20	Hi Scr 3 Credits	00
06	Replay Award	Audit	21	Hi Scr 4 Credits	00
07	Special Award	Score			

62 Install Extra Easy

The operator can change the game play difficulty adjustments to a combination that is extremely easy (sometines called "liberal"). Individual Adjustments are affected, as follows:

Ad	Name	New Setting	Ad	Name	New Setting
31	Solar V. Advance	99,000	40	Solar Timer	20 sec
32	Bon. Mult. Memory	Yes	41	Energy Auto Ad.	50 (%)
33	S. Eject Memory	Yes	42	Energy Timer	15 sec
34	Planets Memory	Yes	43	S. Eject No Auto	otf (No Auto)
35	Ex. Ball Memory	Yes	44	S. Eject Untimed	Untimed
36	Chest Memory	Yes	45	Reach Auto Ad.	10 (%)
37	D. T. Auto Ad.	40 (%)	46	Reach Special	SATURN
38	D. T. Timer	15 sec	47	Consol. Ex. Ball	Yes
39	Solar Auto Ad.	20 (%)			

63 Install Easy

The operator can change the game play difficulty adjustments to a combination that is slightly easier than the Factory Settings. Individual Adjustments are affected, as follows:

Ad	Name	New Setting	Ad	Name	New Setting
31	Solar V. Advance	75,000	40	Solar Timer	20 sec
32	Bon. Mult. Memory	Yes	41	Energy Auto Ad.	50 (%)
33	S. Eject Memory	Yes	42	Energy Timer	15 sec
34	Planets Memory	Yes	43	S. Eject No Auto	off (No Auto)
35	Ex. Ball Memory	Yes	44	S. Eject Untimed	Untimed
36	Chest Memory	Yes	45	Reach Auto Ad.	6 (%)
37	D. T. Auto Ad.	30 (%)	46	Reach Special	SATURN
38	D. T. Timer	15 sec	47	Consol. Ex. Ball	Yes
39	Solar Auto Ad.	20 (%)			

64 Install Medium

The operator can change the game play difficulty adjustments to a combination that matches the Factory Settings. Individual Adjustments are affected, as follows:

Ad	Name	New Setting	Ad	Name	New Setting
31	Solar V. Advance	50,000	40	Solar Timer	20 sec
32	Bon. Mult. Memory	No	41	Energy Auto Ad.	40 (%)
33	S. Eject Memory	Yes	42	Energy Timer	15 sec
34	Planets Memory	Yes	43	S. Eject No Auto	off (No Auto)
35	Ex. Ball Memory	Yes	44	S. Eject Untimed	Untimed
36	Chest Memory	Yes	45	Reach Auto Ad.	4 (%)
37	D. T. Auto Ad.	20 (%)	46	Reach Special	JUPITER
38	D. T. Timer	15 sec	47	Consol. Ex. Ball	Yes
39	Solar Auto Ad.	20 (%)			

65 Install Hard

The operator can change the game play difficulty adjustments to a combination that is more difficult than the Factory Settings. Individual Adjustments are affected, as follows:

Ad	Name	New Setting	Ad	Name	New Setting
31	Solar V. Advance	30,000	40	Solar Timer	20 sec
32	Bon. Mult. Memory	No	41	Energy Auto Ad.	30 (%)
33	S. Eject Memory	No	42	Energy Timer	15 sec
34	Planets Memory	Yes	43	S. Eject No Auto	off (No Auto)
35	Ex. Ball Memory	Yes	44	S. Eject Untimed	Untimed
36	Chest Memory	Yes	45	Reach Auto Ad.	4 (%)
37	D. T. Auto Ad.	20 (%)	46	Reach Special	JUPITER
38	D. T. Timer	15 sec	47	Consol. Ex. Ball	Yes
39	Solar Auto Ad.	20 (%)			

66 Install Extra Hard

The operator can change the game play difficulty adjustments to a combination that is much more difficult than the Factory Settings. Individual Adjustments are affected, as follows:

Ad	Name	New Setting
31	Solar V. Advance	25,000
32	Bon. Mult. Memory	No
33	S. Eject Memory	No
34	Planets Memory	No
35	Ex. Ball Memory	Yes
36	Chest Memory	No
37	D. T. Auto Ad.	10 (%)
38	D. T. Timer	10 sec
39	Solar Auto Ad.	20 (%)
40	Solar Timer	20 sec
41	Energy Auto Ad.	10 (%)
42	Energy Timer	15 sec
43	S. Eject No Auto	oft (No Auto)
44	S. Eject Untimed	Untimed
45	Reach Auto Ad.	4 (%)
46	Reach Special	MARS
47	Consol. Ex. Ball	Yes

67 Auto Burn-in

The operator can choose the YES option for this Special Preset Adjustment to perform certain automatic testing of the game, as used in the factory. It does not affect the game operation, but merely provides for a cyclic testing of most of the game's mechanisms.

68 Clear Coins

The operator can request the clearing of the coinage audits (Au 01 through 04) by selecting (via the Credit button) the YES option, as shown in the player 4 display. This adjustment zeroes the counters tallying the number of coins through each slot, the Paid Credits counter, and the Credits display.

After the YES option is displayed, the operator must press the ADVANCE button. The game then displays COINS CLEARED.

69 Clear Audits

The operator can request the clearing of the non-coinage audits (Au 05 through 38) by selecting (via the Credit button) the YES option, as shown in the player 4 display. This Adjustment zeroes the counters tallying the remaining Audit factors. Please note that this does NOT affect the Automatic Replay Percentaging data nor the automatic High Score Reset counter.

After the YES option is displayed, the operator must press the ADVANCE button. The game then displays AUDITS CLEARED.

70 Install Factory

The operator can request the game to provide the normal Factory Settings to restore the game to its 'factory condition'. This Adjustment clears all Audits, resets all Game Adjustments to the respective Factory Settings, and provides a restart of the Auto Replay (Ad 01).

After the YES option is displayed, the operator must press the ADVANCE button. The game then displays FACTORY SETTING.

Closing of the coin door before appearance of the FACTORY SETTING message or a problem in the Memory Protect circuit will cause the game to display ADJUST FAILURE.

A loss of battery power or improper treatment of the Game Adjustments will cause the game to attempt to restore Factory Settings. The game announces the results of this reset process with the appropriate message, FACTORY SETTING or ADJUST FAILURE.

RESETTING THE HIGH SCORES

The challenge of exceeding the High Score (either the factory setting or a higher score by another player) is the goal of many pinball game players. To keep a pinball game challenging requires a method of resetting the High Score value for those occasions when a skilled player registers a truly excellent score. Other players note this score and may decide not to play simply because their skill is not adequate to exceed an extremely high score.

For *PIN•BOT*, in fact, three methods of resetting the High Score values are available. The simplest method involves allowing Game Adjustment Item Ad 22 to reset the High Score values automatically after the specified number of plays designated by the operator. The second method requires pressing the High Score Reset switch on the inside of the coin door in the Attract Mode. This action simply erases the previous high score values and replaces them with the Backup High Score values. The third method establishes new values replacing the factory setting values or previous operator setting values; it requires performing the following steps:

1. Using AUTO-UP or MANUAL-DOWN, reach item Ad 14 (and items Ad 15, 16, and 17, if desired). The High Score value of the factory setting (or previous operator-adjusted setting) appears in the player 1 display. If this value is satisfactory, go to step 4 below.

2. If you wish to increase the High Score value from that displayed in the player 1 display, use AUTO-UP, and press the Credit button, until the desired value shows in the player 1 display.

3. If you wish to decrease the High Score value, use MANUAL-DOWN, and press the Credit button, until the desired value shows in the player 1 display.

4. Using AUTO-UP, press and hold down ADVANCE, until the Credits display shows Ad and the BALL IN PLAY/MATCH display shows item 70. Press ADVANCE once, to return to Game-Over Mode.

5. Press the High Score Reset switch (on coin door), and listen for the sound signifying that the score reset action is complete. Observe player score displays (player 1, player 2, etc.) to verify that the new High Score values are displayed.

GAME PRICING

PRICING MADE EASY. Game Adjustment Item Ad 24 allows the operator an easy method of setting the pricing functions. If the operator enters a "Standard Setting" number (from 01 to 16) into Adjustment Item 24, each of the other pricing items (25 through 30) changes to the value shown in the ***Pricing Table*** for that selected "Standard Setting".

CUSTOM PRICING. Adjustment Item 24 must be set to the Custom Coinage Setting (player 1 and 2 displaying CUSTOM COINAGE) to enable the operator to enter desired custom pricing selections for Items 25 through 30, based on the ***Pricing Table.*** Item 25 is the left coin chute multiplier. Item 26 is the center coin chute multiplier. Item 27 is the right coin chute multiplier. Item 28 is the number of coin units equal to one Credit. (A Credit is usually equal to one game.)

The calculation of the ratio of Games : Price uses the ratio equation of X : VC , where:

X = Coin Chute Multiplier (Item 25, 26, or 27 in ***Pricing Table***);
V = Value of coin;
C = Coin units eqivalent to one Credit (Item 28).

For example, for 25¢ chutes at the factory setting, substituting values in the Games : Price ratio calculation gives 1 : 25 x 1, or one game for 25¢.

UNITS REQUIRED FOR BONUS CREDIT. Item 29 is the number of coin units that must pass through the coin chute(s) before an additional Credit (game) is posted (displayed). At the factory setting, the number in this item is 00. (This 00 means that NO bonus credit (free game) is awarded, although purchase of more than one game at a time occurs.)

GAME PRICING (Continued)

MINIMUM COIN UNITS. Item 30 determines the number of coin units that must pass through the coin chute(s) before play may begin. The factory setting for this item is 00. (This 00 means that the Minimum Coin Units feature (Item 30) is disabled, by the factory setting.)

PIN•BOT Pricing Table

Country	Coin Chute Left	Center	Right	Games/Coin	Pricing Functions 24	25	26	27	28	29	30
USA and Canada	25¢	-	25¢	1/25¢, 4/$1 [1,2]	01	01	04	01	01	00	00
				1/50¢, 2/$1 [2]	03	01	04	01	02	00	00
				2/25¢, 8/$1	00	02	00	02	01	00	00
				1/25¢, 3/50¢, 6/$1 [2]	04	01	04	01	01	02	00
				1/25¢, 5/$1	00	01	00	01	01	04	00
				1/50¢, 3/$1 [2]	02	01	04	01	02	04	00
West Germany	1 DM	2 DM	5 DM	1/1 DM, 3/2 DM, 10/5 DM [2,3]	09	09	18	45	05	45	00
				1/1 DM, 2/2 DM, 6/5 DMark [2]	10	06	12	30	05	00	00
				1/1 DM, 3/2 DM, 9/5 DM	00	09	18	45	05	00	00
				1/2x1 DM, 1/2 DM, 3/5 DM [2]	11	03	06	15	05	00	00
				2/1 DM, 5/2 DM, 14/5 DM [2]	12	13	26	65	05	65	00
				Ticket/Token Mode [4]							
				Keysel Mode [4]							
France	1 F	5 F	10 F	1/3x1 F, 2/5 F, 5/10 Franc [2]	13	02	10	20	05	20	00
Antilles (Netherlands)	25¢	-	1 G	1/25¢, 4/1 Guilder	00	01	01	04	01	00	00
Netherlands	25¢	-	1 G	1/25¢, 5/1 Guilder	00	01	00	05	01	00	00
Belgium	5 F	-	20 F	1/2x5 F, 2/20 Franc [2]	08	01	01	04	02	00	00
	5 F	5 F	20 F	1/2X5 F, 1/2X5 F, 2/20 F [2]	08	01	01	04	02	00	00
	5 F	20 F	20 F	1/2x5 F, 2/20 F, 2/20 F [2]	00	01	04	04	02	00	00
Spain	25 P	-	100P	1/25 P, 5/100 Peseta [2]	15	01	00	05	01	00	00
Switzerland	1 F	2 F	5 F	1/1 F, 3/2 F, 7/5 Franc	00	02	06	14	02	00	00
	1 F	-	2 F	1/1 F, 3/2 F [2]	07	03	00	06	02	00	00
Japan	100 ¥	-	100 ¥	2/100 Yen	00	04	00	04	02	00	00
	-	100 ¥	-	2/100 ¥ [2]	16	01	04	01	02	00	00
Italy	100 L	-	100 L	1/200 Lire [2]	14	01	04	01	02	00	00
Australia	20¢	-	$1	1/2x20 ¢, 3/$1 [2]	05	01	00	06	02	00	00
United Kingdom	10 P	50 P	20 P	1/10 P, 5/50 P, 2/20 Pence	00	01	05	02	01	00	00
	10 P	50 P	10 P	1/10 P, 5/50 P [2]	06	01	05	01	01	00	00
Argentina	10¢	10¢	10¢	1/1 Token	00	01	01	01	01	00	00
Austria	5 Sch	-	10 Sch	2/5 Sch, 5/10 Schilling	00	02	00	05	01	00	00
	1 Sch	5 Sch	10 Sch	2/5x1 Sch, 2/5 Sch, 5/10 Sch	00	02	10	25	05	00	00
Chile	Token	-	Token	1/1 Token [1,2]	01	01	04	01	01	00	00
Denmark	1 Kr	5 Kr	10 Kr	1/2x1 Kr, 3/5 Kr, 7/10 Krone	00	01	06	14	02	00	00
Finland	1 Mka	-	1 Mka	1/1 Markka [1,2]	01	01	04	01	01	00	00
New Zealand	20¢	-	20¢	1/2x20¢ [2]	03	01	04	01	02	00	00
Norway	1 Kr	-	1 Kr	1/2x1 Kr, 3/5x1 Krone	00	01	00	01	02	05	00
Sweden	1 Kr	-	1 Kr	1/2x1 Krona [2]	03	01	04	01	02	00	00

Notes: 1. Factory Default. 2. Standard Setting - Adjust setting of Item 24 ONLY. 3. Default with jumper W7 cut/removed. 4. Other functions are also affected; see the explanations for Adjustment items 53 through 58.

TEST/DIAGNOSTIC PROCEDURES

WILLIAMS ELECTRONICS GAMES provides a series of diagnostic tests to aid the operator in determining game condition (that is, whether the game's features and highlights are operating satisfactorily). These tests activate virtually all the electronic and electromechanical devices comprising the game, so that the operator can readily locate a malfunctioning device or simply verify that all devices are working properly. In order, these tests deal with the music, the displays, the game sounds, the lamps, the solenoids, and the switches.

In addition to the diagnostic testing, a feature called the Auto Burn-in Mode is available. Activating this mode enables the operator to observe the game while all of the diagnostic tests, *except the switch test*, occur. This can be very helpful in locating intermittent problems.

Activating either the entire test series or one of the individual tests requires use of the Game Adjustment/ Diagnostic switches. Open the coin door for access to these switches. To proceed to the Diagnostic Tests, the operator must simply switch the game On, set the AUTO-UP/MANUAL-DOWN switch to MANUAL-DOWN, and press the ADVANCE button.

CAUTION

PIN•BOT's System 11 game program has a new capability to aid the operator and service personnel: When the operator is beginning the Test/Diagnostic Procedures (and also at game Turn-On), a display now signals when a switch has NOT been actuated during ball play for a lengthy period of time (60 balls, or 20 games). However, for the Switch Problem Reporting activity at the beginning of the Test/Diagnostic Procedures, the display of problem switches is *not* limited to just three switches; it now includes *ALL* switches exhibiting problems. Refer to the text on Switch Tests for additional information. To proceed with the Test/Diagnostic Procedures, use AUTO-UP, and press ADVANCE.

MUSIC TEST.

1. In the Music Test, observe that the player 1 and 2 displays show the message, MUSIC TEST. Switching to AUTO-UP, observe that the message now reads MUSIC OFF, and that the BALL IN PLAY/MATCH display shows 00. Press the Credit button to select the desired music selection: 01 - 'Game Theme' through 07 - 'Hi. Score Theme' (the selections repeat). Adjust the volume control for proper sound level for the game location.

2. Use the AUTO-UP position.

DISPLAY TEST.

1. To initiate the Display Test, press ADVANCE. Observe that player 1 and 2 displays briefly show the message, DISPLAY TEST, and that the Credits display shows 00 (the Display Test identifier).

2. Use AUTO-UP. Observe that all displays begin a display cycle of all 0s through all 9s, one digit at a time. Verify that the proper comma segments light during display of the odd-numbered digits. Next, a special "all segments" character 'walks' from left to right across each display (player 1, 2, 3, 4, BALL IN PLAY/MATCH, Credits).

3. To halt the display cycle, use MANUAL-DOWN. Then, press ADVANCE to step through the sequential digit display, digit by digit, and the subsequent "all segments" characters display test. Use AUTO-UP to resume cycling, and to proceed to the next test.

SOUND TEST.

1. (From Display Test) To initiate the Sound Test, press ADVANCE. Observe that the player 1 and 2 displays show the message, SOUND TEST, and that the Credit display shows 01 (the Sound Test identifier). The BALL IN PLAY/MATCH display shows a series of test steps from 00 through 07. Verify that a different sound is heard each time the number in the BALL IN PLAY/MATCH display changes.

SOUND TEST (Continued)

2. To repeatedly pulse a single sound, use MANUAL-DOWN. Verify that one particular sound repeats. Press ADVANCE to step to the next sound, which repeats until ADVANCE is pressed again. Use AUTO-UP to resume cycling the sounds, and to proceed to the next test.

LAMP TESTS.

1. **All Lamps.**
(From Sound Test) To initiate the first Lamps Test, press ADVANCE. Observe that the player 1 and 2 displays show the message, ALL LAMPS, and that the Credit display shows 02 (All Lamps Test identifier) and that all feature lamps (playfield and backbox) blink on and off. (Note, however, that the General Illumination lamps remain lighted steadily.) To locate the wiring associated with a particular feature lamp, refer to the **Lamp-Matrix Table**. CPU Board connections at jacks 1J6 (columns) and 1J7 (rows) are also listed in the table.

2. **Single Lamps.**
From the All Lamps test, using AUTO-UP, press ADVANCE to enable *PIN•BOT* to initiate the Single Lamps Test. The player 1 and 2 displays initially show the message, SINGLE LAMPS, and the Credit display shows 03. Then, the BALL IN PLAY/ MATCH display shows 01 and the player 1 and 2 displays show GAME OVER, the name of the lamp currently blinking. Press the Credit button to proceed through an ascending series of designator numbers (01 through 64), with the player 1 and 2 displays showing the individual lamp's name. Press and hold the Credit button to proceed rapidly to the desired lamp.

[2] Double Lamp

***PIN•BOT* Lamp-Matrix Table**

Δ = #555 Bulb, p/n 24-8767
Remaining Lamps = #44 Bulb, p/n 24-6549

COLUMN / ROW	1 Q66 YEL•BRN 1J7•1	2 Q64 YEL•RED 1J7•2	3 Q62 YEL•ORN 1J7•3	4 Q60 YEL•BLK 1J7•4	5 Q58 YEL•GRN 1J7•6	6 Q56 YEL•BLU 1J7•7	7 Q54 YEL•VIO 1J7•8	8 Q52 YEL•GRY 1J7•9
Q80 RED• 1 BRN 1J6•1	Game Over (Backbox) [2] 1	2X 9	Drop Targets' Single Timer Lamp 17	Earth 25	Shoot Again (Playfield) 33	Drop Targets' Top Lamp 41	Left Outlane Extra Ball 49	Right Outlane Extra Ball 57
Q81 RED• 2 BLK 1J6•2	Match (Backbox) 2	3X 10	Advance Planet 18	Venus 26	Score ENERGY 34	Drop Targets' Middle Lamp 42	Left Return Extra Ball 50	Right Return Extra Ball 58
Q82 RED• 3 ORN 1J6•3	Ball In Play (Backbox) 3	4X 11	Pluto 19	Mercury 27	Solar Energy Value 35	Drop Targets' Bottom Lamp 43	Special 51	Not Used 59
Q83 RED• 4 YEL 1J6•5	Mouth 1 (Backbox Left) 4	5X 12	Neptune 20	Yellow 1 (Top) Δ 28	Blue 1 (Top) Δ 36	Amber 1 (Top) Δ 44	Green 1 (Top) Δ 52	Red 1 (Top) Δ 60
Q84 RED• 5 GRN 1J6•6	Mouth 2 (Backbox) 5	Single Eject's 25K 13	Uranus 21	Yellow 2 Δ 29	Blue 2 Δ 37	Amber 2 Δ 45	Green 2 Δ 53	Red 2 Δ 61
Q85 RED• 6 BLU 1J6•7	Mouth 3 (Backbox) 6	Single Eject's 50K 14	Saturn 22	Yellow 3 Δ 30	Blue 3 Δ 38	Amber 3 Δ 46	Green 3 Δ 54	Red 3 Δ 62
Q86 RED• 7 VIO 1J6•8	Mouth 4 (Backbox) 7	Single Eject's 75K 15	Jupiter 23	Yellow 4 Δ 31	Blue 4 Δ 39	Amber 4 Δ 47	Green 4 Δ 55	Red 4 Δ 63
Q87 RED• 8 GRY 1J6•9	Mouth 5 (Backbox Right) 8	Single Eject's Light Extra Ball 16	Mars 24	Yellow 5 (Bottom) Δ 32	Blue 5 (Bottom) Δ 40	Amber 5 (Bottom) Δ 48	Green 5 (Bottom) Δ 56	Red 5 (Bottom) Δ 64

SOLENOID TEST.

1. (From Lamp Test) Using AUTO-UP, press ADVANCE. Observe that the player 1 and 2 displays show the message, COIL TEST, the Credit display shows 04 (Solenoid Test identifier). Next, the BALL IN PLAY/ MATCH display shows a series of test steps from 01 through 22, while the player 1 and 2 displays show the name of the solenoid. During each of these steps, pulsing of the respective solenoid occurs. The test cycles repeatedly, unless halted via the MANUAL-DOWN switch. Refer to the **Solenoid Table** for solenoid numbers and wiring information. CPU Board connections at 1P11, 1P12, and 1P19 are also listed in the table.

   To continuously pulse a single solenoid, use MANUAL-DOWN. Press ADVANCE to sequence through the switched, controlled, and special solenoids. Use AUTO-UP to resume test cycling, and to proceed to the next test.

PIN•BOT Solenoid Table

Sol. No.	Function	Solenoid Type	Wire Color [1]	Connections		Driver Trans.	Solenoid Part No.
				CPU Bd.	Playfield/ Cabinet		
01A [3]	Outhole	Switched	{Vio-Brn}	1P11-1	8P3-1 (to B1 on	Q33	AE-23-800-01
01C [3]	Knocker	Switched	{Blk-Brn}	(Gry-Brn)	Diode Sw. Bd.)	Q33	AE-23-800-02
02A [3]	Ball Trough Feeder	Switched	{Vio-Red}	1P11-3	8P3-2 (to B2 on	Q25	AE-23-800-03
02C [3]	Upper P'fld & "Top" Flashers (2)	Switched	{Blk-Red}	(Gry-Red)	Diode Sw. Bd.)	Q25	#89 flashlamps
03A [3]	Single Eject Hole	Switched	{Vio-Orn}	1P11-4	8P3-3 (to B3 on	Q32	AE-23-800-03
03C [3]	Left Insert Bd. Flasher	Switched	{Blk-Orn}	(Gry-Orn)	Diode Sw. Bd.)	Q32	#89 flashlamps
04A [3]	Drop Target (3-Bank)	Switched	{Vio-Yel}	1P11-5	8P3-4 (to B4 on	Q24	AE-23-800-04
04C [3]	Right Insert Bd. Flasher	Switched	{Blk-Yel}	(Gry-Yel)	Diode Sw. Bd.)	Q24	#89 flashlamps
05A [3]	Ramp Raise	Switched	{Vio-Grn}	1P11-6	8P3-5 (to B5 on	Q31	AE-24-900-02
05C [3]	Lower P'fld & "Top" Flashers (1)	Switched	{Blk-Grn}	(Gry-Grn)	Diode Sw. Bd.)	Q31	#89 flashlamps
06A [3]	Ramp Lower (Outer)	Switched	{Vio-Blu}	1P11-7	8P3-6 (to B6 on	Q23	SM-26-600-DC
06C [3]	Energy Flashers	Switched	{Blk-Blu}	(Gry-Blu)	Diode Sw. Bd.)	Q23	#89 flashlamps
07A [3]	Left Eject Hole (Visor)	Switched	{Vio-Vio}	1P11-8	8P3-7 (to B7 on	Q30	AE-23-800-03
07C [3]	Left Playfield Flasher	Switched	{Blk-Vio}	(Gry-Vio)	Diode Sw. Bd.)	Q30	#89 flashlamps
08A [3]	Right Eject Hole (Visor)	Switched	{Vio-Gry}	1P11-9	8P3-8 (to B8 on	Q22	AE-23-800-03
08C [3]	Sun Flasher	Switched	{Blk-Gry}	(Gry-Blk)	Diode Sw. Bd.)	Q22	#89 flashlamps
09	Robot Face - Insert Bd.	Controlled	Brn-Blk	1P12-1	8P3-9	Q17	#1251 flashlamps
10	Right Visor - Gen. Illumin.	Controlled	Brn-Red	1P12-2	8P3-10	Q9	#1251 flashlamps
11	General Illumin. - Insert Bd.	Controlled	Brn-Orn	1P12-4	8P3-12	Q16	5580-09555-01 [4]
12	General Illumin. - Playfield	Controlled	Brn-Yel	1P12-5	3P7-1	Q8	5580-09555-01 [4]
13	Visor Motor	Controlled	Brn-Grn	1P12-6	8P3-13	Q15	5580-09555-01 [4]
14	Solenoid Select Relay	Controlled	Brn-Blu	1P12-7	8P3-14	Q7	5580-09555-01 [4]
15	"Top" Flashers (3)	Controlled	Brn-Vio	1P12-8	8P3-15	Q14	#89 flashlamps
16	"Top" Flashers (4, center)	Controlled	Brn-Gry	1P12-9	8P3-16	Q6	#89 flashlamps
17	Lower Jet Bumper	Special #1	Blu-Brn	1P19-7	8P3-17	Q75	AE-23-800-03
18	Left Visor Gen. Illumin.	Special #2	Blu-Red	1P19-4	8P3-18	Q71	#1251 flashlamps
19	Left Jet Bumper	Special #3	Blu-Orn	1P19-3	8P3-19	Q73	AE-23-800-03
20	Left Kicker	Special #4	Blu-Yel	1P19-6	8P3-20	Q69	AE-23-800-03
21	Right Kicker	Special #5	Blu-Grn	1P19-8	8P3-21	Q77	AE-23-800-03
22	Upper Jet Bumper	Special #6	Blu-Blk	1P19-9	8P3-22	Q79	AE-23-800-03
-	Right Flipper	-	Orn-Vio [Blu-Vio]	1P19-1	7P1-20 [7J1-21,8P3-34] [2]	-	FL23/600-30/2600-50VDC
-	Left Flipper	-	Orn-Gry [Blu-Gry]	1P19-2	7P1-23 [7J1-24,8P3-32] [2]	-	FL23/600-30/2600-50VDC

Notes. 1. Wire colors, except flipper Orn-Vio and Orn-Gry, are ground connections (to coil terminal with unbanded end of diode). Flipper Orn-Vio and Orn-Gry wires connect from CPU Board to flipper switch. 2. Flipper connections shown in braces are from flipper switch to flipper coil. 3. "A" coils are pulsed, when Sol. 14 is de-energized; "C" coils are pulsed, with Sol. 14 energized. Wire colors in brackets are those from respective A and C terminals corresponding to the B terminal connection listed for the Diode Switching Board, which controls the device pulsing by Sol. 14. 4. Relay (p/n 5580-09555-01) is mounted on Relay Snubber Ckt. Bd. p/n C-11232-1.

SOLENOID TEST (Continued)

"On" State Logic - Special Solenoid

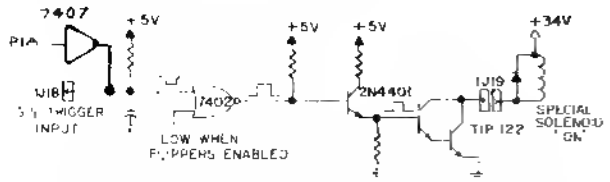

"Off" State - Special Solenoid:
The Special Switch Trigger Input goes low. Meanwhile, the PIA line remains high. The remaining signals reverse their states.

"On" State Logic - Controlled Solenoid

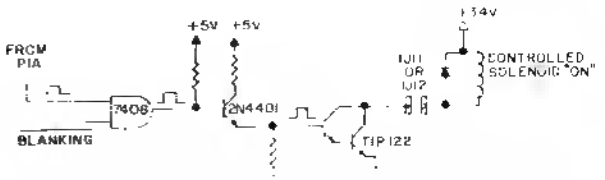

"Off" State - Controlled Solenoid:
The Enable Input (from the PIA) goes low. Meanwhile, the BLANKING signal remains high. The rest of the signals reverse their states.

NOTE

As directed by the game program, the Solenoid Select Relay (solenoid 14) switches the solenoid B+ power between two power busses to permit actuating two groups of solenoids at the proper times. In its de-energized state, the Relay connects the 'circuit A power' to 16 "controlled" and "switched" solenoids (identified in the table with no suffix letter or the letter A, after the solenoid number). Individual solenoid operation then depends on the game program enabling the ground path for solenoid actuation via the driver transistor associated with each solenoid circuit. For example, the game program can actuate the Ramp Raise solenoid (sol. 05A), via the driver transistor Q31.

When the game program determines that the Relay (sol. 14) must be energized, the relay then connects 'circuit C power' to eight group C solenoids (01C through 08C). Now, driver transistor Q31 can actuate the Lower Playfield and Backbox Flashers (sol. 05C). Using this "multiplexing" technique, the same driver transistor can control actuation of two separate solenoids.

SWITCH TESTS.

1. **Switch Levels.**
(From Solenoid Test) To initiate the Switch Levels Test, press ADVANCE. Observe that the player 1 and 2 displays show the message, SWITCH LEVELS, the Credit display shows 05 (Switch Levels Test identifier), and the BALL IN PLAY/MATCH display is blank, indicating that no switch is actuated.

If, however, a switch *is* actuated (possibly stuck closed), the BALL IN PLAY/MATCH display shows that switch's number, while the player 1 and 2 displays indicate the switch's name. A sound also accompanies the displays. (This is another facet of the new *PIN•BOT System-11* switch testing capability.) If more than one switch is closed, each switch's name and number becomes a member of a series of displays, each showing the switches' names and numbers.

(In addition, either of these problems could result in the reporting of a switch problem (or problems) at game Turn-On or at the beginning of Diagnostic Tests.)

As soon as the operator opens a closed switch, its name and number are eliminated from the Switch Levels display series. For *PIN•BOT,* switch numbers can range from 01 through 48. Refer to the **Switch-Matrix Table** for switch numbers and wiring information. CPU Board connections at jacks 1J8 (columns) and 1J10 (rows) are also listed in the table.

Row Problems. If a display of two (or more) switch numbers of a row occurs, although only one switch is closed, check for a short circuit between the column wires.

Multiple Switch Number Indications. Check the associated column wire for a short circuit to ground.

SWITCH TESTS (Continued).

Column Problems. If display of two (or more) switch numbers in a column occurs (while only one switch is actuated), check for a short circuit between the row wires.

Use AUTO-UP to proceed to the next test.

2. **Switch Edges.**
From the Switch Levels Test, press ADVANCE. Observe that the player 1 and 2 displays show the message, SWITCH EDGES, the Credit display shows 06 (Switch Edges Test identifier), and the BALL IN PLAY/MATCH display is blank, indicating that no switch is actuated.

This test permits the operator to test whether actuating a switch provides the proper signal to the System-11 switch testing program. When actuating a switch, the operator should see the switch's name and number (in the player 1 and 2, and the BALL IN PLAY/MATCH displays, respectively). If no indication appears at the time the switch is actuated, the operator then knows that there is a malfunction associated with that switch.

***PIN•BOT* Switch-Matrix Table**

COLUMN / ROW	1 Q45 GRN•BRN 1J8•1	2 Q49 GRN•RED 1J8•2	3 Q44 GRN•ORN 1J8•3	4 Q48 GRN•YEL 1J8•4	5 Q43 GRN•BLK 1J8•5	6 Q47 GRN•BLU 1J8•7	7 Q42 GRN•VIO 1J8•8	8 Q46 GRN•GRY 1J8•9
1 WHT•BRN 1J10•9	Plumb Bob Tilt 1	Playfield Tilt 9	Ball Trough #1 (Lower Right) 17	Left Eject 25	Right 5-Bank (Top) 33	Not Used 41	Left Drop Target (Upper) 49	Not Used 57
2 WHT•RED 1J10•8	Ball Roll Tilt 2	Left Lane Change 10	Ball Trough #2 (Center) 18	Right Eject 26	Right 5-Bank 34	Not Used 42	Left Drop Target (Mid) 50	Not Used 58
3 WHT•ORN 1J10•7	Credit Button 3	Right Lane Change 11	Advance Planet 19	Not Used 27	Right 5-Bank (Center) 35	Not Used 43	Left Drop Target (Lower) 51	10 Point 59
4 WHT•YEL 1J10•6	Right Coin Chute 4	Left Outlane 12	Shooter Lane 20	Visor Target 1 (Left) 28	Right 5-Bank 36	Ramp Down 44	Top Jet Bumper 52	10 Point 60
5 WHT•GRN 1J10•5	Center Coin Chute 5	Left Return Lane 13	Not Used 21	Visor Target 2 29	Right 5-Bank (Bottom) 37	Score Energy 45	Bottom Jet Bumper 53	Not Used 61
6 WHT•BLU 1J10•3	Left Coin Chute 6	Right Return Lane 14	Vortex 20K 22	Visor Target 3 (Center) 30	Single Eject 38	Visor Closed 46	Left Sling 54	Not Used 62
7 WHT•VIO 1J10•2	Slam Tilt 7	Right Outlane 15	Vortex 100K 23	Visor Target 4 31	Exit Ramp 39	Visor Open 47	Right Sling 55	Not Used 63
8 WHT•GRY 1J10•1	High-Score Reset 8	Outhole 16	Vortex 5K (Exit) 24	Visor Target 5 (Right) 32	Enter Ramp 40	Left Jet Bumper 48	10 Point 56	Not Used 64

Using this technique, the operator can test each switch appearing in the *PIN•BOT* switch problem reporting displays (either at game Turn-On or at the beginning of the Diagnostic Tests) to determine whether the switch can be actuated. If the switch's name and number are displayed while the operator checks its operation, the operator then knows that the reported problem with that switch is NOT currently caused by a switch malfunction. The operator can then seek other causes for the reported problem, being almost certain now that the switch did not fail. *This test is also useful when the operator is adjusting the sensitivity of a particular switch's actuation mechanism.*

SWITCH TESTS (Continued).

Among the possibilities is the fact that the players have not hit that switch because of some other problem; the operator should try to analyze what could cause the switch to be missed, and remedy that problem cause. With these new tests, switch problems are, therefore, more easily isolated.

Coin Chute Switches. During the Switch Edges test, the System-11 switch testing program energizes the coin lockout relays, to prevent testing actuations of the coin chute switches from affecting the data contained in the audit counters, thereby maintaining accurate records of the game's earnings.

3. *Playfield or CPU Board?* To determine whether a switch problem is in the playfield or the CPU Board, remove connectors 1P8 and 1P10 from the CPU Board. Begin the Switch Test. Use a jumper wire to simulate switch actuation. For example, placing a jumper between 1J10-9 and 1J8-2 should (based on the **Switch-Matrix Table**) should produce an indication of switch 09 being actuated.

ENDING THE DIAGNOSTIC TESTS.

To end the Diagnostic Tests, reach the Switch Edges Test (06 in the Credits display), use AUTO-UP and press ADVANCE. The backbox displays should show the *PIN•BOT* game's Identification Information. Use MANUAL-DOWN, and press ADVANCE to reach Adjustment Item 70 (INSTALL FACTORY). Use AUTO-UP and press ADVANCE to obtain the Attract Mode.

AUTO BURN-IN MODE.

The Auto Burn-in Mode permits the operator to check intermittent (or nonrecurring) problems associated with most portions of the game's circuitry. Repeatedly cycling through a group of tests can sometimes bring a problem, which occurs only randomly or occasionally, to exhibit itself more frequently, thereby aiding in the isolation of the problem. To activate the Auto Burn-in Mode:

1. While in the Game Adjustments, reach Ad 67 and change the Factory Setting of NO to YES, via the Credit button. Set the AUTO-UP/MANUAL-DOWN switch to AUTO-UP.

2. Press ADVANCE to start the Auto Burn-in Mode. This mode repeatedly sequences through the Music Test, the Display Test, the Sound Test, the All Lamps portion of the Lamp Test, and the Solenoid Test.

3. To halt the Auto Burn-in Mode, switch the game Off and then On. *PIN•BOT* now starts in the Attract Mode. (If a switch problem is now reported by the displays, perform the Switch Tests again to determine the nature of the problem; then, perform necessary repairs.)

SYSTEM-11 MEMORY CHIP TEST.

A new feature is now included in the Memory Chip Test for System 11. During power-up, the CPU performs a self-testing routine. When all tests are satisfactory, the game proceeds to the Attract Mode, allowing players to use the game. Whenever a portion of the testing does not produce satisfactory results, the game displays a message, before proceeding to the next portion of the testing. ONLY after all tests are satisfactory does the game allow play.

In addition to the displayed message, when a test fails, the lower LED mounted on the CPU Board can be observed to determine the probable cause of the problem. The LED blinks, or flashes, a certain number of times to identify the probable cause, as described in the **CPU LED Indicator Codes Table**. The operator can also start the self-testing routine by pressing the CPU Diagnostic Switch (SW 2) on the edge of the CPU Board.

***PIN•BOT* CPU LED Indicator Codes Table**

Diagnostic LED		
Blinks/ Flashes	Display Message	Explanation
1	U25 RAM FAILURE	U25 RAM could not be used properly (NO other tests are performed, the game is locked here, until the game is turned off).
2	MEM. PROT. FAILURE	This message means that (A) the Coin Door may be shut, (B) the Memory Protect Switch may be stuck in the ON position, (C) the memory protect logic is protecting the memory; or (D) a U25 RAM failure is occurring. (See Note 1)
3	U51 PIA FAILURE	U51 has a malfunction. (See Note 2)
4	U38 PIA FAILURE	U38 has a malfunction. (See Note 2)
5	U41 PIA FAILURE	U41 has a malfunction. (See Note 2)
6	U42 PIA FAILURE	U42 has a malfunction. (See Note 2)
7	U54 PIA FAILURE	U54 has a malfunction. (See Note 2)
8	U10 PIA FAILURE	U10 has a malfunction. (See Note 2)
9	IRQ FAILURE	IRQ has a malfunction. It may be missing or too fast or too slow
10	U27 ROM FAILURE	U27's internal checksums do not match. It may be a ROM failure, or its associated connections and connectingdevices are causing it to appear to have a problem. (The following U26 test is skipped.)
11	U26 ROM FAILURE	U26's internal checksums do not match.

Notes: 1. This test assumes that the Coin Door is OPEN; it is initiated ONLY by pressing the CPU Diagnostic Switch (SW2).

2. Alternatively, its associated connections or connecting devices are causing the IC to appear to have problems.

SYSTEM-11 SOUND SECTION TEST.

Press the Sound Diagnostic Switch (SW 1) on the CPU Board. Listen for the sound, which shows that the sound circuitry is functioning properly.

NO SOUND DURING THIS TEST (but sound can be heard during the Diagnostic Tests).
Check the sound-select inputs (pins 2 through 9 of U9) to see if they pulse during Sound Test 01. Also, check the -12 V supply voltage on the CPU Board. If this voltage is low (or AC ripple seems too high), perform the following checks:

1. The gray and gray-green transformer secondary wires for 19.4 VAC.
2. The CPU Board filter capacitor C26 for -12 VDC.
3. The filter capacitor C26 for excessive AC ripple (over 0.75VAC).

If the previous checks did not isolate the problem, turn the Volume Control for maximum output. Momentarily touch a powered-up AC soldering pencil on the center tap of the Volume Control.

CAUTION

DO NOT use a soldering iron over 40 watts. Note also that cordless soldering irons will NOT work for this test.

Hearing a low hum indicates that the power amplifier (U1, TDA2002), the Volume Control, and the speaker are operating satisfactorily, as is the sound circuit cabling. Not hearing a hum requires repeating the test with the Volume Control turned part way down, to determine whether the Volume Control is faulty. Also, check the cable connectors for proper mating, and that no broken wires affect this circuit .

A brief check of the System 11 Sound system occurs at game Turn-on; the game reports the test results by brief sounds, as follows: No sound = B/G Sound & Speech Board is not operating, or a failure is affecting the sound circuitry (broken cable; dead amplifier; etc.); 1 sound = system OK; 2 sounds = RAM problem; 3 sounds = U4 problem; 4 sounds = U19 problem.

Figure 2 shows the two main lubrication points of the Ball Trough Feeder (also the Multi-Ball Ejector,which utilizes the same mechanism). The shaded arrows show the directions in which the Ball Trough Feeder and other parts of its related assemblies can be adjusted for proper operation.

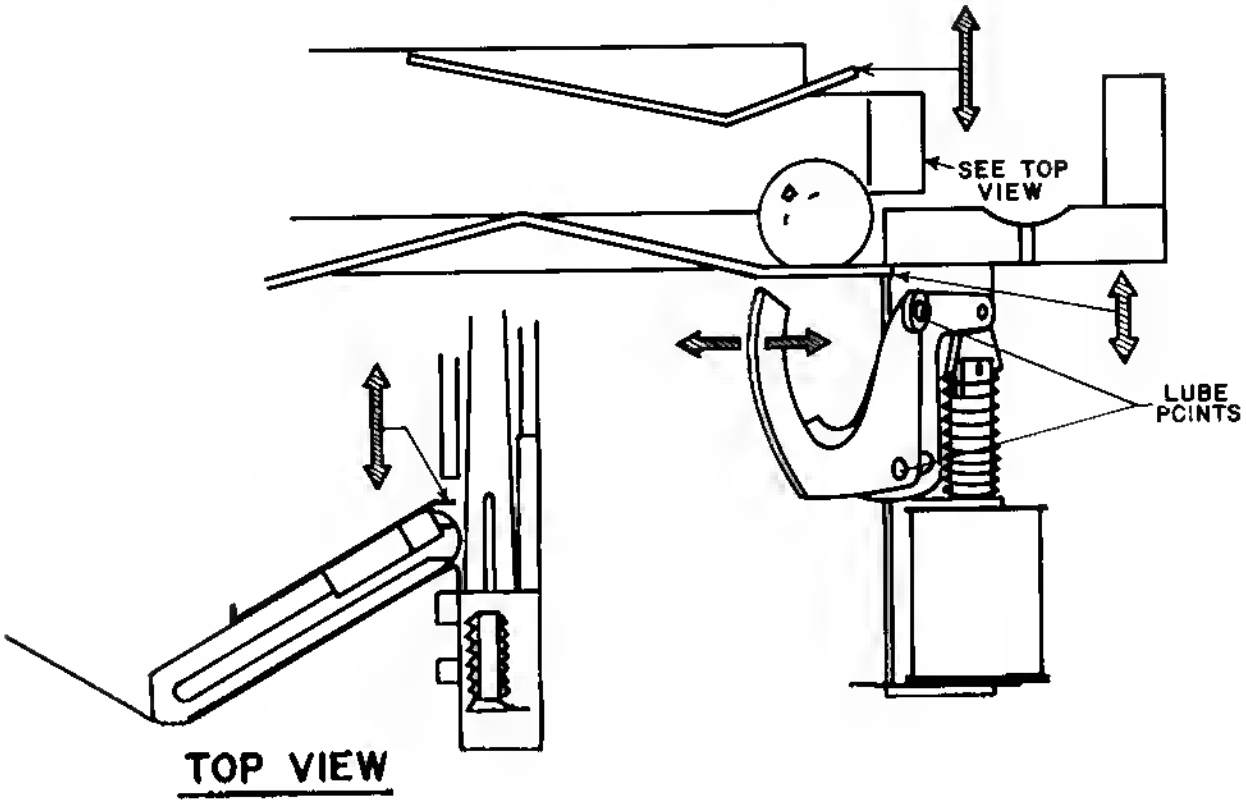

Figure 2. Adjustments and Lubrication Points, Ball Trough Feeder.

Section 2

Game Parts Information

- Parts Lists and Diagrams:

  Displays
  Playfield Pivot Parts
  A/N Master Display Board (C-10877)
  B/G Sound/Speech Board (D-11297)
  Power Supply Board (D-8345-549)
  CPU Board (D-11392-549)
  Backbox
  3-Bank Drop Target
  Flipper Assemblies
  Miscellaneous Game Parts
  Ball Eject Assembly
  Playfield Parts
  Solenoids/Flashers & Rubber Parts
  Lamps
  Switches

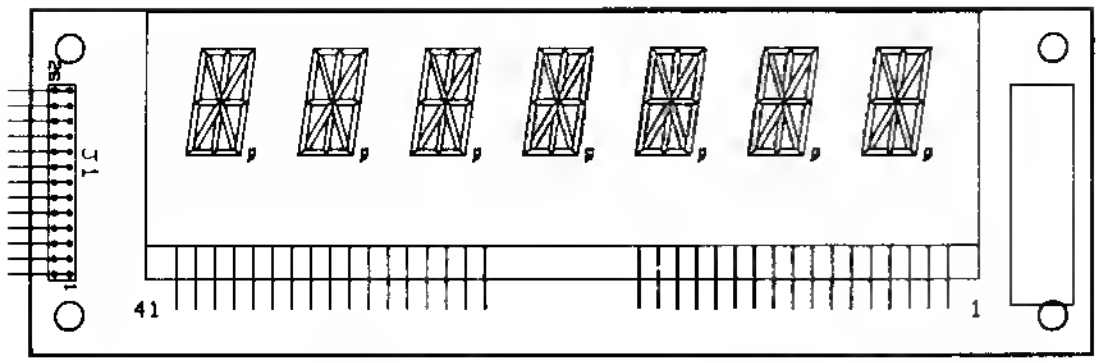

C-10866 Player Score Display Panel Assembly (Alphameric)
(Display Glass, p/n 5670-10873-00)

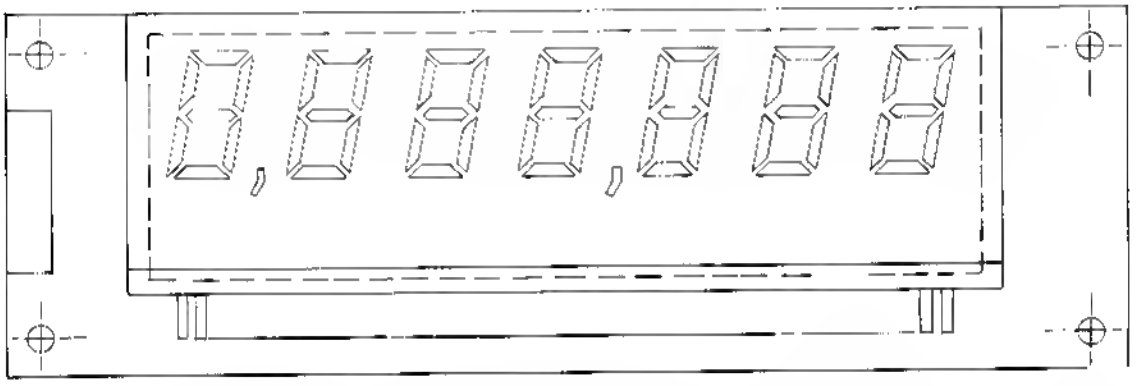

C-8364-1 Player Score Display Panel Assembly (7-Segment)
(Display Glass, p/n 5670-09439-00)

Display Characters Segment Designations

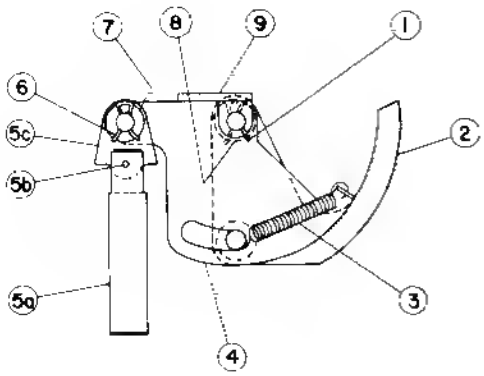

Ball Trough Feeder

p/n C-9638

Item	Part No.	Description
1	12-6227	Clip, Hair Pin
2	A-8247	Ball Eject Cam Assembly
3	10-320	Spring
4	A-6949-L	Spring Plate Assembly
5	A-8050-1	Plunger Assembly
a)	02-3407-2	Coil Plunger
b)	20-8716-5	Roll Pin
c)	01-1789	Armature Link
6	12-6227	Clip, Hair Pin
7	4700-00030-00	Washer, 1/2 o.d. x 17/64 i.d. x 15 ga.
8	4700-00103-00	Washer, 1/2 o.d. x .265 i.d. x .015 thk.
9	A-8268	Mounting Bracket Assembly

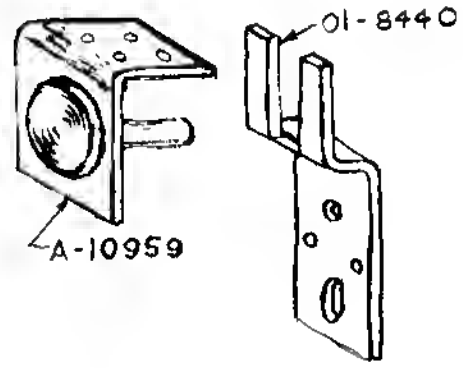

Playfield Pivot & Hinge Bracket

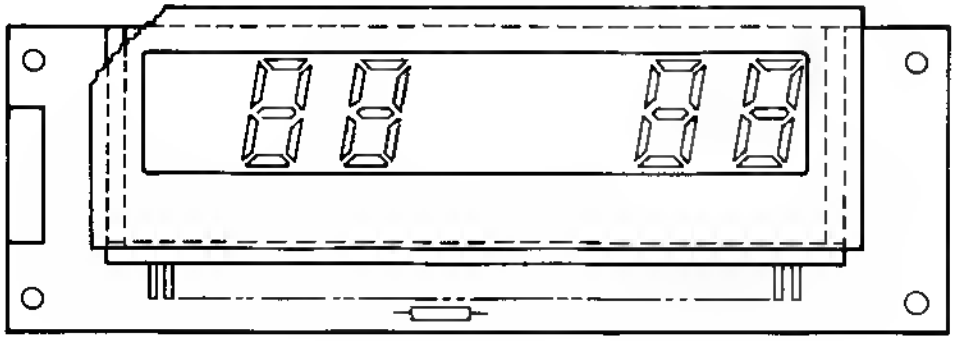

C-8365-1 BALL-IN-PLAY/MATCH Display Panel Assembly

(Display Glass, p/n 5670-09448-00)

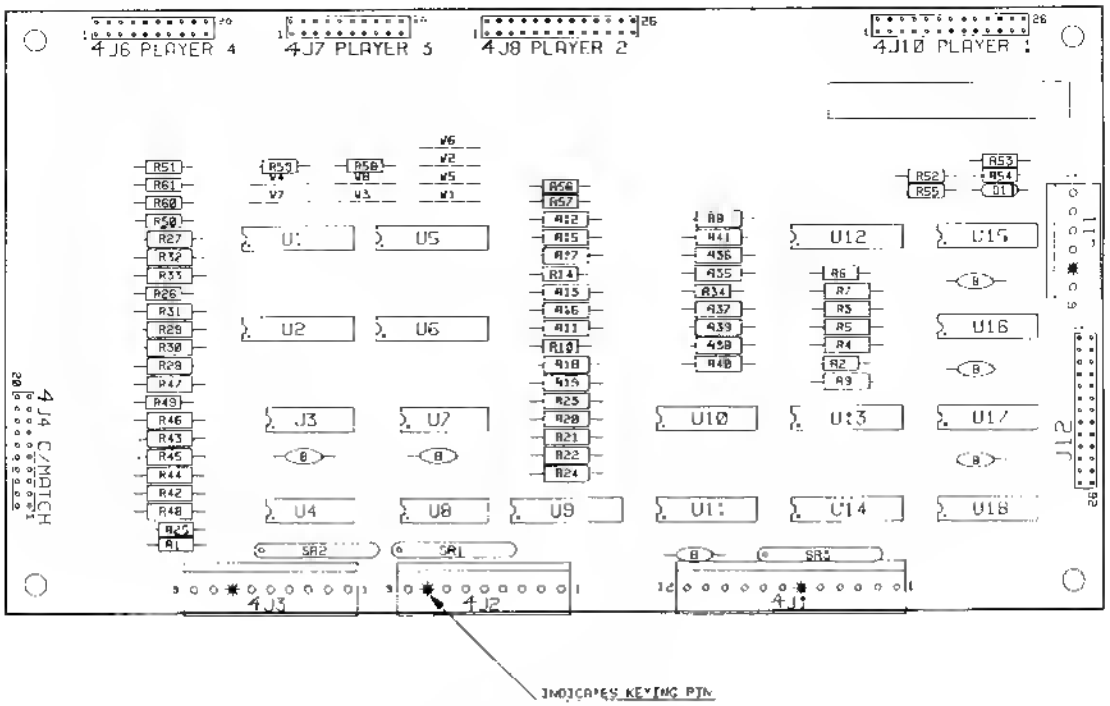

Alphanumeric Master Display Board

p/n (D-10877)

Item	Part No.	Ckt Designation	Description
1	5760-10875-00		Bare P. C. Board
2	5791-10850-00	J8, J10, J12	Connector, 26 pin (Hdr)
3	5791-09437-00	J4, J6, J7	Connector, 20 pin (Hdr)
4	5791-10862-12	J1	Connector, 12 pin (Hdr)
5	5791-10862-09	J2, J3	Connector, 9 pin (Hdr)
6	5791-10862-06	J11	Connector, 6 pin (Hdr)
7	5010-10258-00	R25, R26, R50 - R61	Resistor, 1 M, 1/4 w, 5%
8	5010-09774-00	R1, R2, R6, R10, R14, R34, R35	Resistor, 18 K, 1/4 w, 5%
9	5010-08772-00	R49	Resistor, 15 K, 1/4 w, 5%
10	5010-08981-00	R18 - R24, R27 - R33, R36, R37, R39, R40, R42 - R48	Resistor, 10 K, 1/4 w, 5%
11	5010-09534-00	W1 - W8	Resistor, 0 Ω
12	5019-10387-00	SR1 - SR3	SIP, 18 K, 9R, 10P, 5%
13	5043-08980-00	B	Capacitor, 0.01 mfd, 50V
14	5075-09135-00	D1	Zener, 1N4740A, 10V, 1 w
15	5310-09153-00	U10, U11, U15 - U18	IC, Hex Buffer, 4050
16	5310-09882-00	U3, U4, U7, U8	IC, Quad NOR, 4001B
17	5680-08969-00	U9, U12 - U14	IC, Cathode Seg. Driver, UDN7180A
18	5680-08968-00	U1, U2, U5, U6	IC, Anode/Digit Driver, UDN6118A or 6184
19	16-8850-139		Label, P. C. Board Ident.
20	5010-10927-00	R3 - R5, R7 - R9, R11 - R13, R15 - R17, R38, R41	Resistor, 8.2 K, 1/2 w,5%

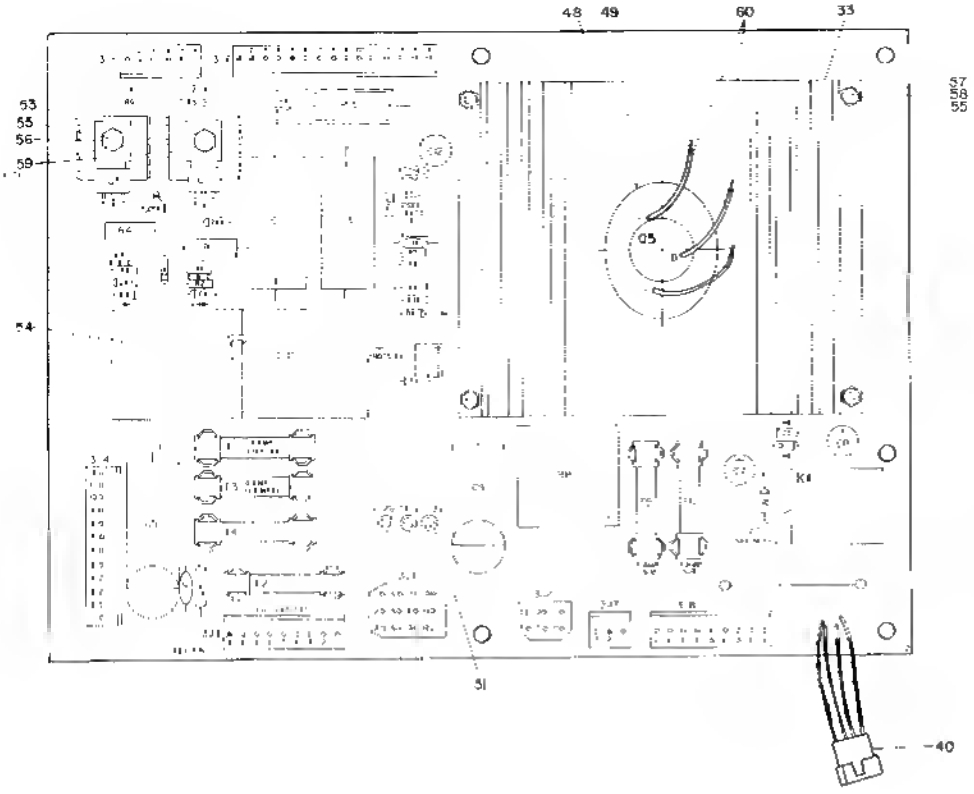

NOTES:

1. Heat sink compound must be applied between transistor and heat sink.
2. Observe index mark on integrated circuit, polarity of diodes and capacitors, and position of transistors.
3. The view of Q5 and its related heat sink and hardware is from the bottom of the heat sink, to clarify installation.

Power Supply

p/n D-8345-549

Item	Part No.	Ckt Designator	Description
1	5765-09466-01		Bare P. C. Board
2	5013-09426-00	R7	Resistor, 2.15K, 1%, 1/4w, Metal Film
3	5013-09427-00	R8	Resistor, 4.99K, 1%, 1/4w, Metal Film
4	5010-09428-00	R11	Resistor, 1.5K, 2%, 1/4w, C. Film
5	5010-09085-00	R10	Resistor, 1.5K, 5%, 1/4w
6	5010-09541-00	R9	Resistor, 2.7K, 2%, 1/4w
7	5010-09508-00	R12	Resistor, 270Ω, 2%, 1/4w, C. Film
8	5012-09429-00	R13	Resistor, 0.12Ω, 5%, 5w
9	5010-09536-00	R1, R4	Resistor, 39K, 5%, 1w
10	5010-09061-00	R2, R5	Resistor, 680Ω, 2w
11	5010-09069-00	R3, R6	Resistor, 330K, 5%, 1/2w
12	5040-09419-00	C10	Capacitor, 18,000 mfd, electr, 20v, axial
13	5040-09420-00	C9	Capacitor, 1000 mfd, electr, 25v, axial or radial
14	5040-09423-00	C12	Capacitor, 330 mfd, electr, 10v, radial
15	5043-9065-00	C15	Capacitor, 470 pfd
16	5040-9053-00	C1, C3	Capacitor, 100 mfd, electr, 150v
17	5040-09070-00	C5	Capacitor, 100 mfd, electr, 100v, axial or radial
18	5043-09072-00	C2, C4	Capacitor, 0.1 mfd, 500v, disc
19	5043-09446-00	C14	Capacitor, 0.1 mfd, 50v, disc
20	5070-06258-00	D1, D2, D5, D6	Diode, 1N4001
21	5070-09054-00	D3, D4	Diode, 1N4004
22	5075-09059-00	ZR1, ZR3	Zener, 1N5990, 3.9v, 5%
23	5075-09060-00	ZR2, ZR4	Zener, 1N4764, 100v, 5%
24	5460-09424-00	IC1	IC, Volt. Reg., MC1723C
25	5043-09443-00	C6	Capacitor, 0.1 mfd, 200v, disc
26	5040-09421-00	C7	Capacitor, 100 mfd, 25v, radial
27	5040-09422-00	C8	Capacitor, 47 mfd, 50v, radial
28	5164-09057-00	Q1	Transistor, SDS201, NPN
29	5164-09056-00	Q4	Transistor, MPSD02, NPN
30	5194-09058-00	Q3	Transistor, SDS202, PNP
31	5194-09055-00	Q2	Transistor, MPSD52, PNP
32	5162-09425-00	Q5	Transistor, 2N6057, NPN
33	5705-09431-00		Heak Sink
34	5791-09074-00	3J6	Connector, 15 pin (Hdr)
35	5791-09027-00	3J3, 3J8	Connector, 9 pin (Hdr)
36	5791-09038-00	3J2	Connector, 6 pin (Hdr)
37	5791-09067-00	3J5	Connector, 6 pin (Hdr)
38	5791-09434-00	3J4	Connector, 12 pin (Hdr)
39	5791-09435-00	3J7	Connector, 3 pin (Hdr)
40	H-11065	3J9	Cable/Connector Assembly
a)	5791-09400-00		Connector shell
b)	5820-09080-00		Connector pin
41	5791-09068-00	3J1	Connector, 12 pin (Hdr)
42	5321-09178-00		Fuseholder
43	5731-06314-00	F2	Fuse, 4.0A, 250v, S-B
44	5731-09071-00	F3	Fuse, 8A, 32v
45	5730-09128-00	F4	Fuse, 2.5A, 250v
46	5731-08761-00	F1	Fuse, 1/4A, 250v, S-B
47	5017-09064-00	VR1	Varistor
48	5700-09445-00		Socket
49	5701-09652-00		Mica Insulator
50	5580-09555-00	K1	Relay, 24VDC, 10A, DPDT
51	5824-09428-00	TP1 - TP4	Terminal, #1502-1 (Test Post)
52	5100-09418-00	BR1	Bridge Rectifier, 35A, 100V
53	5705-09042-00		Heat Sink
54	03-7947		Tie Wrap
55	4005-01016-00		Mach. Screw, 5-40 x 7/16, RH
56	4700-00004-00		Flatwasher, 0.146 x 3/8, 21 Ga.
57	4701-00023-00		Lockwasher, #5, split
58	4405-01117-00		Hex Nut, 5-40
59	20-9229		Heat sink Thermal Compound
60	HW-30118-4		Lead wire, 18 AWG, 3"
61	5731-01003-00	F6, F5	Fuse, 7A, 250V, S-B

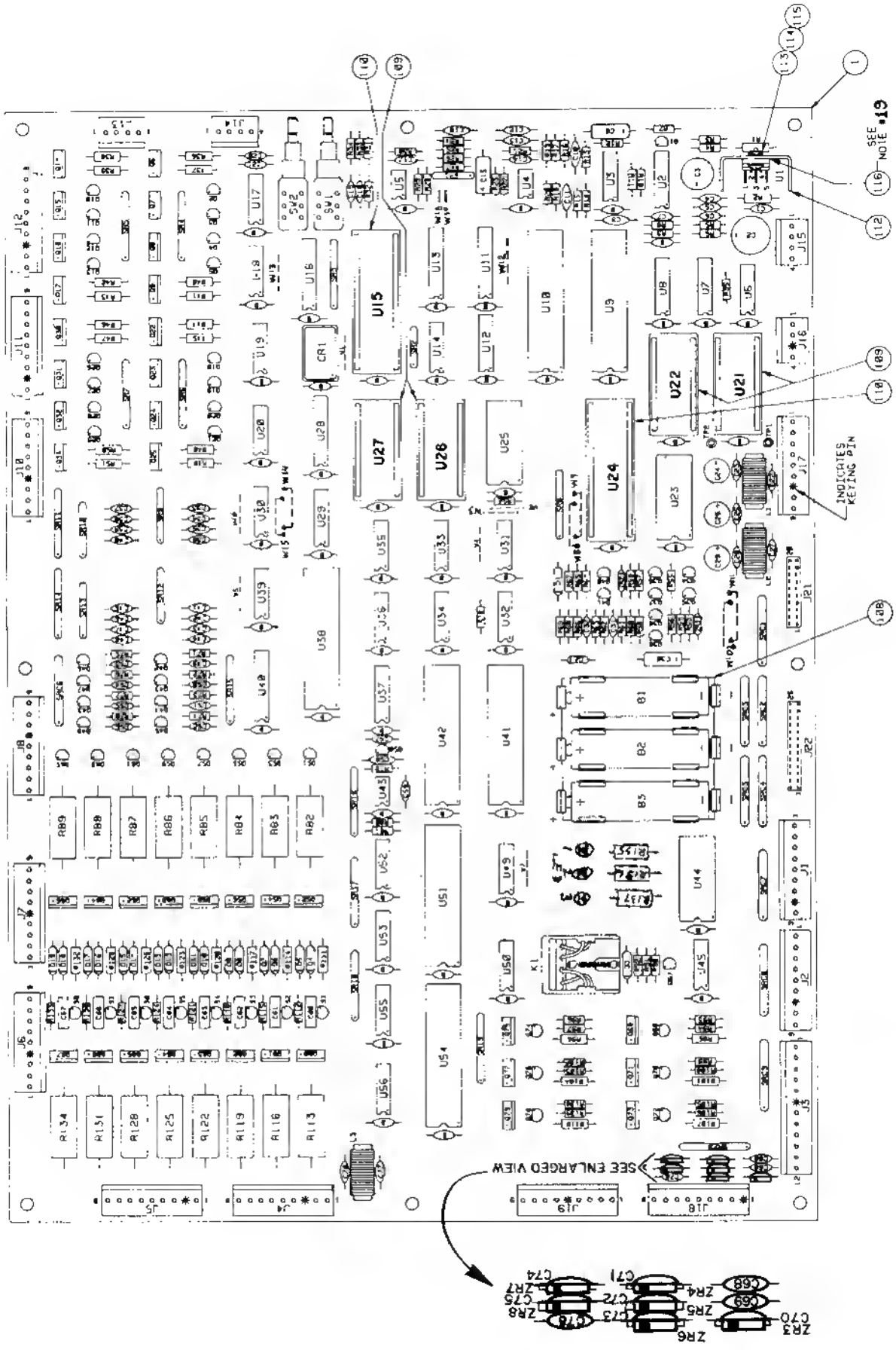

System 11A CPU Board (D-11392) Parts Information

NOTES:

1. FOR SCHEMATIC, REFER TO DWG. #16-8947.
2. FOR ITEMS #56 AND #58 RESISTORS MUST BE MOUNTED 1/8" ABOVE SURFACE OF PCB.
3. I.C., 6800/6821, PIA: U9, U10, U38, U41, U42, U51, U54.
4. TRANSISTOR, 2N6427: Q51, Q53, Q55, Q57, Q59, Q61, Q63, Q65.
5. TRANSISTOR, TIP42: Q52, Q54, Q56, Q58, Q60, Q62, Q64, Q66.
6. TRANSISTOR, TIP122: Q6 THRU Q9, Q14 THRU Q17, Q22 THRU Q25, Q30 THRU Q33, Q69, Q71, Q73, Q75, Q77, Q79, Q86 THRU Q87.
7. TRANSISTOR, 2N4401: Q2 THRU Q5, Q10 THRU Q13, Q18 THRU Q21, Q26 THRU Q29, Q34 THRU Q38, Q41, Q67, Q68, Q78, Q72, Q74, Q76, Q78.
8. JUMPER, STANDARD: W1, W2, W4, W5, W7, W8, W10 THRU W14, W16.
9. RESISTOR, 4.7K OHM: R31, R32, R45, R52, R55, R58, R92, R135.
10. RESISTOR, 2.0K OHM: R5, R6, R54, R57, R58, R64, R66, R112, R115, R118, R121, R124, R127, R130, R133.
11. RESISTOR, 10K OHM: R1 THRU R14, R25, R26, R53, R60, R55, R58.
12. RESISTOR, 2.7K OHM: R23, R24, R91, R93, R96, R99, R102, R105, R108.
13. RESISTOR, .4 OHM 3 WATT: R115, R116, R119, R122, R125, R128, R131, R134.
14. RESISTOR, 68 OHM 1/2 WATT: R36 THRU R51, R35, R58, R131, R104, R107, R110.
15. RESISTOR, 1.2K OHM: R111, R114, R117, R120, R123, R126, R129, R132.
16. SIP, 4.7K OHM & 470 PFD.: SRC, THRU SRC5, SRC7, SRC8, SRC9.
17. CAPACITOR, .01 MFD. BYPASS (8): 55 CAPACITORS, C14, C17 THRU C21, C31, C52, C59, C48, C54, C56.
18. CAPACITOR, 470 PFD.: C33 THRU C40, C68, C69, C76.
19. USE THERMAL COMPOUND BETWEEN ITEM #24 (Q17) AND ITEM #112.
20. CONNECTOR, 9-PIN: J01, J12, J14 THRU J18, J110, J111, J112, J117, J118, J119.

ITEM	PART NO.	PART DESIGNATION	DESCRIPTION	QTY.
123	5791-09437-00	J121	20-PIN RIBBON HEADER	1
122	5791-10859-00	J122	26-PIN RIBBON HEADER	1
121	5075-09009-04	ZR3 THRU ZR9	ZENER DIODE 6.2V 5W	6
120	5791-09862-12	J13	HEADER, 12H STR. SQ. PIN, .156	1
119	5791-10842-04	J113 THRU J116	HEADER, 4H STR. SQ. PIN, .156	4
118	5791-10842-09	SEE NOTE #20	HEADER, 9H STR. SQ. PIN, .156	11
117	5568-08894-00	K1	RELAY, 4P, 40 OHM 6V	1
116	DC 3228	SEE NOTE #19	THERMAL COMPOUND	012 OZ.
115	4705-00027-00		#8 EXT. LOCKWASHER	1
114	4436-01117-00		6-32 HEX. NUT	1
113	4696-01083-06		6-32 X 3/8" P PH S	1
112	5705-09159-03		HEATSINK 4803U	1
111	5824-09248-00	TP1, TP2	TEST POINT	2
110	5736-08935-00		48 PIN SOCKET	2
109	5730-18176-00		28-PIN SOCKET	1
108	5881-09021-00		BATTERY HOLDER #121	1
107	20-9491	W7, W8	BUS WIRE	1.7"
106	5800-09242-03	B1, B2, B3	BATTERY, ALKA. INE. 1.5V (A 23)	3
105	5841-09312-20	SW1	SWITCH, P DPDT 100V. 5A.	1
104	5841-09653-00	SW2	P.B.M. BUTTON SWITCH, SPST	2
103	5551-09882-03	L1, L2, L3	INDUCTOR, 4.7 UH 5%	3
102	5846-09248-03	C15	CAPACITOR, POLYSTYRENE, 4700 PFD. 5% 50 VOLTS	1
101	5846-09346-00	C12	CAPACITOR, POLYSTYRENE, 1200 PFD. 1% 50 VOLTS	1
100	5846-09352-03	C11	CAPACITOR, POLYSTYRENE, 180 PFD. 5% 100 VOLTS	1
99	5846-09347-00	C14	CAPACITOR, POLYSTYRENE, 1800 PFD. 5% 50 VOLTS	1
98	5045-09038-00	C16, C57	CAPACITOR, CERAMIC, .047 MFD. +80% -20%	2
97	5045-09031-00	C9, C58	CAPACITOR, CERAMIC, .1 MFD. +80% -20%	2
96	5040-09545-00	C30	CAP., ELECT., AXIAL, 22 MFD., 10V +50-10%	1
95	5045-09236-00	SEE NOTE #18	CAPACITOR, CERAMIC, .472 MFD. 50V +80-20%	11
94	5045-09236-02	C3 THRU C12	CAP. POLYCARBONATE PCB, .1 MFD. 100V +/-10%	8
93	5040-09776-00	C2	CAP., ELECT., RADIAL, 470 MFD. 16V +50-10%	1
92	5040-09434-02	C5, C24, C26, C29	CAP., ELECT., RADIAL, 100 MFD. 35V +50-10%	4
91	5045-09841-06	C7, C11 THRU C19	CAPACITOR, CERAMIC, 47 PFD. 50V +/-20%	9
90	5040-09343-06	C8, C15	CAP., ELECT., AXIAL, 10 MFD. 25V +50-10%	2
89	5045-08896-02	C1, C4, C6, C27, C28, C30, C31	CAPACITOR, CERAMIC, .1 MFD. 50V +/-20%	10
88	5045-09845-00	C20, C22, C23, C25, C27, C29	CAPACITOR, CERAMIC, .01 MFD. 50V +/-20%	6
87	5045-08896-04	SEE NOTE #17	CAPACITOR, CERAMIC, .01 MFD. 50V +80-20%	71
86				
85	5060-10336-00	SEE NOTE #16	SIP, 8R BC 10-PIN, 4.7K OHM 2% 470 PFD.	8
84	5060-09793-00	SR5, SR7	SIP, 9R 10 PIN, 2.7K OHM .125 W/R 5%	2
83	5060-09786-02	SR1, SR2	SIP, 5R 6-PIN, 4.7K OHM .125 W/R 5%	2
82	5060-09760-00	SR3, SR10, SR12, SR13	SIP, 4R 5-PIN, 1K OHM 5%	4
81	5060-09669-00	SR8, SR9	SIP, 9R 10 PIN, 1.0K OHM .125 W/R 5%	2
80	5060-09472-00	SR14	SIP, 9R 10-PIN, 3.3K OHM .125 W/R 5%	1
79	5060-09785-00	SR16	SIP, 9R 10-PIN, 2.2K OHM 1/4 WATT 5%	1
78	5060-09809-00	SR4, SR11, SR15, SR17, SR18, SR19, SR20	SIP, 9R 10-PIN, 560 OHM .125 W/R 5%	7
77	5060-09562-00	SR6, SR17, SR18, SR19, SR20	SIP, 9R 10-PIN, 4.7K OHM .125 W/R 5%	5
76	5060-09783-00	SR18	SIP, 9R 10-PIN, 6.8K OHM .125 W/R 5%	1
75	5610-09356-00	R27, R28	RESISTOR, C.F., 820 OHM 5% 1/4 WATT	2
74	5610-09772-00	R21	RESISTOR, C.F., 1K OHM 5% 1/4 WATT	1
73	5610-09324-00	R19, R20, R22, R29, R30, R31	RESISTOR, C.F., 22K OHM 5% 1/4 WATT	6
72	5610-09355-00	R18	RESISTOR, C.F., 180K OHM 5% 1/4 WATT	1
71	5610-09646-00	R17	RESISTOR, C.F., 220K OHM 5% 1/4 WATT	1
70	5610-09352-00	R16	RESISTOR, C.F., 18K OHM 5% 1/4 WATT	1
69	5610-09624-00	R15	RESISTOR, C.F., 43K OHM 5% 1/4 WATT	1
68	5610-10631-20	SEE NOTE #15	RESISTOR, C.F., 2.4K OHM 5% 1/2 WATT	8
67	5610-09845-04	R11 THR. R28	RESISTOR, C.F., 5.6K OHM 5% 1/4 WATT	8
66	5610-09279-20	R9	RESISTOR, C.F., 3.3K OHM 5% 1/4 WATT	1
65	5610-09416-00	R10	RESISTOR, C.F., 470 OHM 5% 1/4 WATT	2
64	5610-09560-02	R24, R26, R27	RESISTOR, C.F., 220 OHM 5% 1/4 WATT	4
63	5610-10170-02	R63	RESISTOR, C.F., 47 OHM 5% 1/4 WATT	1
62	5610-10171-00	R62	RESISTOR, C.F., 56 OHM 5% 1/4 WATT	1
61	5610-09161-00	R4	RESISTOR, C.F., 2.2 OHM 5% 1/4 WATT	1
60	5610-09161-00	R3	RESISTOR, C.F., 1.0 OHM 5% 1/2 WATT	1
59	5610-09356-00	R1	RESISTOR, C.F., 220 OHM 5% 1/2 WATT	1
58	5610-10869-00	R52 THRU R59, SEE NOTE #2	RESISTOR, C.F., 27 OHM 5% 2 WATT	8
57	5610-09953-00	SEE NOTE #14	RESISTOR, C.F., 68 OHM 5% 1/2 WATT	22
56	5610-09357-00	SEE NOTES #7 AND #15	RESISTOR, WIREWOUND, .4 OHM 5% 5 WATT	6
55	5610-09997-00	SEE NOTE #12	RESISTOR, C.F., 2.7K OHM 5% 1/4 WATT	9
54	5610-09563-00	R3	RESISTOR, C.F., 5.6K OHM 5% 1/4 WATT	1
53	5610-09596-00	R91	RESISTOR, C.F., 6.8K OHM 5% 1/4 WATT	1
52	5610-09554-00	SEE NOTE #11	RESISTOR, C.F., 10K OHM 5% 1/4 WATT	10
51	5610-09585-00	R7, R8, R10, R70, R80	RESISTOR, C.F., 5.6K OHM 5% 1/4 WATT	5
50	5610-09579-00	R79	RESISTOR, C.F., 6.8K OHM 5% 1/4 WATT	1
49	5610-09356-00	SEE NOTE #10	RESISTOR, C.F., 1.0K OHM 5% 1/4 WATT	15
48	5610-09991-00	SEE NOTE #9	RESISTOR, C.F., 4.7K OHM 5% 1/4 WATT	8
47	5610-09554-00	SEE NOTE #8	RESISTOR, C.F., 10K OHM 5% 1/4 WATT	9
46	5610-09833-00	R56	RESISTOR, C.F., 10 OHM 5% 1/4 WATT	1
45	5610-09832-00	R54, R57, R100, R105, R109	RESISTOR, C.F., 560 OHM 5% 1/4 WATT	5
44	5075-09059-02	ZR2	ZENER DIODE, 1N5990 3.9V .5W	1
43	5075-09008-00	ZR1	ZENER DIODE, 1N5988A 6.8V .5W	1
42	5082-09266-00	C1	SILICON DIODE, 1N5817 1.0 A	1
41	5082-09419-00	D2	SILICON DIODE, 1N4148 150 mA	1
40	5082-09258-00	D3 THRU D13	DIODE, 1N4001	12
39	5810-08016-00	S1 THRU S8	SILICON CONTROL RECT., 2N5060 .8A 30.	8
38	5190-09316-00	U39, U50	TRANSISTOR, TO-92, 2N4403, PNP	2
37	5160-10269-00	D1, D4A, D42 THRU D43	TRANSISTOR, TO-92, 2N5304, NPN	10
36	5160-08858-00	SEE NOTE #7	TRANSISTOR, TO-92, 2N4401, NPN	29
35	5162-09418-00	SEE NOTE #6	TRANSISTOR, TO-220, TIP122, NPN	30
34	5190-09378-20	SEE NOTE #5	TRANSISTOR, TO-220, TIP42, PNP	8
33	5160-09876-20	SEE NOTE #4	TRANSISTOR, TO-92, 2N6427, NPN DARLINGTON	8
32	5521-10595-00	C31	CRYST. OSC., 4 MHz.	1

ITEM	PART NO.	PART DESIGNATION	DESCRIPTION	QTY.
31	5791-09019-04	LED1-8	DISPLAY LED	1
30	5280-09589-00	U43	I.C., 7407, HEX. BUFFERS/OPEN-COLLECTOR	1
29	5280-09549-00	J45, U58	I.C., 7400, QUAD 2-INPUT NOR	2
28	5518-09155-00	J150, U59	I.C., MC14411, BAUD RATE GENERATOR	2
27	5288-09874-00	U55, U56	I.C., 7486, QUAD 2-INPUT EXCLUSIVE OR	4
26	5280-09547-00	J17 THRU J20, J52, J55	I.C., 7408, QUAD 2-INPUT AND	6
25	5281-09867-00	U11, U13, U40	I.C., 74LS244, OCTAL BUFFER	3
24	5570-09156-00	J1	I.C., TDA2002, AUDIO AMPLIFIER	1
23	5548-09078-00	U23	I.C., 2016, 2K X 8 STATIC RAM	1
22	5281-09746-00	U37	I.C., 74LS138, 3 TO 8 LINE DECODER	1
21	5571-09152-00	U2	I.C., MC1408, D/A CONVERTER	1
20	5281-09498-00	U28	I.C., 74LS374, OCTAL D-TYPE FLIP-FLOP	1
19	5281-10814-00	U33	I.C., 74LS20, DUAL 4-INPUT NAND	1
18	5281-09498-00	U31, U34	I.C., 74LS00, QUAD 2-INPUT NAND	2
17	5280-09417-00	J56	I.C., 7404, HEX. INVERTER	1
16	5281-09835-00	U35	I.C., 74S10, TRIPLE 3-INPUT NAND	1
15	5281-09247-20	U14	I.C., 74S08, QUAD 2-INPUT AND	1
14	5281-09743-20	U32	I.C., 74S08, QUAD 2 INPUT AND	1
13	5810-09236-03	J29	I.C., 68B09, COUNTER 14 BIT CMOS	1
12	5431-09449-00	J143	I.C., MC4558, TIMER	1
11	5281-09487-00	U6	I.C., 74LS74, DUAL D-TYPE FLIP-FLOP	1
10				1
9	5280-09487-00	U48	I.C., 7447, BCD TO 7 SEG. DECODER	1
8	5281-09546-00	J7, J8, J12	I.C., 74LS154, DUAL 2 TO 4 LINE DECODER	3
7	5280-P7012-00	J44	I.C., 74154, 4 TO 16 DECODER	1
6	5740-12159-00	J25	I.C., 5517-2, 2K X 8 CMOS ST. RAM	1
5	5430-09972-00	SEE NOTE #3	T.T., 6820 5821, PIA	1
4	5281-09508-00	U.6	I.C., 74LS245, OCTAL BUS TRANSCEIVER	1
3	5570-09321-00	J4, J5	I.C., 7458, DUAL 2P-2HP.	2
2	5570-09691-00	U3	I.C., 55536, LOW-INDUCTIVE WIRE BELL SLEW JET-MOD.	1
1	5764-10881-00		BARE PC BOARD	1
ITEM	PART NO.	PART DESIGNATION	DESCRIPTION	QTY.

BILL OF MATERIAL

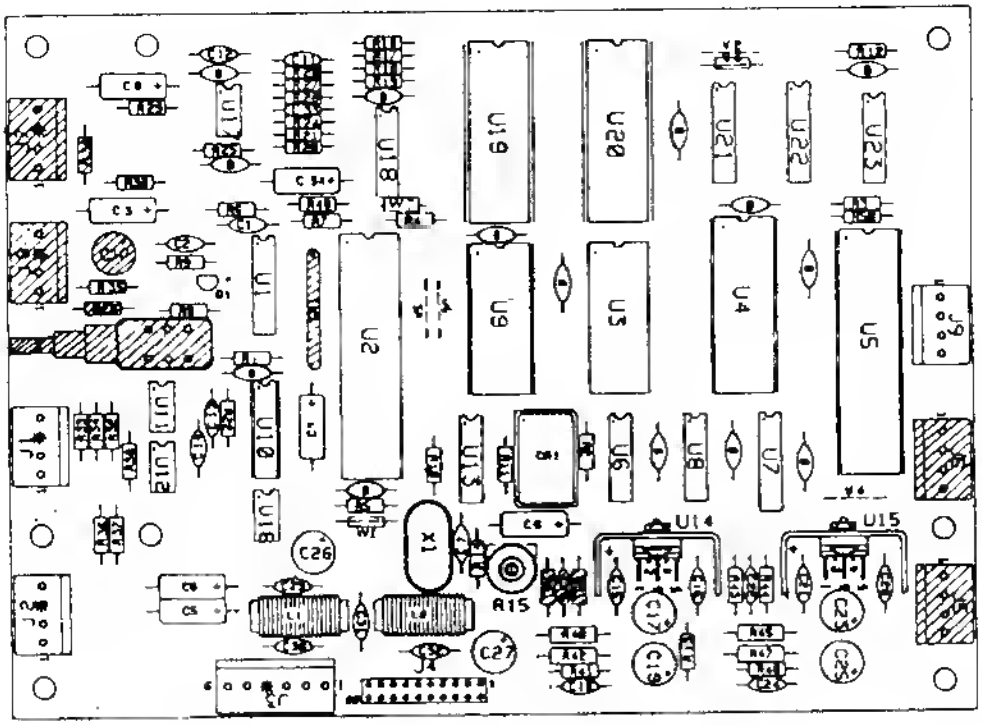

Background Speech & Sound Board

p/n D-11297-549

Item	Part No.	Ckt Designator	Description
1	5766-12057-00		Bare P. C. Board
2	5371-09152-00	U1	IC, D/A Convtr, MC1408
3	5430-10322-00	U2	IC, PIA, MC68B21
4	5340-09878-00	U3	IC, RAM, 2016
5	5281-09487-00	U6, U23	IC, Dual Flipflop, 74LS74
6	5281-09745-00	U7	IC, Dual Mux, 74LS138
7	5281-09235-00	U8	IC,Triple Nand, 74LS10
8	5370-09321-00	U11, U12, U16, U17	IC, Op Amp, MC1458
9	5281-09215-00	U13	IC, Hex Inv, 74LS04
10	5281-10043-00	U21	IC, 74LS175
11	5281-09246-00	U22	IC, 2-4 Dec,74LS139
12	5370-09156-00	U14, U15	IC, Aud. Amp, TDA2002
13	5370-09335-00	U18	IC, CVSD, 55516
14	5160-10269-00	Q1	Transistor, 2N3904, NPN
15	5014-12061-00	R15	Potentiometer, 100K, Horiz.
16	5010-09181-00	R42, R47	Resistor, 1.0Ω, 1/2w.
17	5010-09161-00	R41, R46	Resistor, 2.2Ω
18	5010-09361-00	R13, R40, R45	Resistor, 220Ω
19	5010-09358-00	R43, R44	Resistor, 1K
20	5010-08998-00	R10, R11	Resistor, 2.2K
21	5010-08983-00	R6 - R8	Resistor, 3.3K
22	5010-08991-00	R1 - R5, R12, R36, R48 - R50	Resistor, 4.7K
23	5010-09034-00	R16 - R19, R30, R32 - R35, R38	Resistor, 10K
24	5010-08772-00	R28	Resistor, 15K
25	5010-09324-00	R22, R26, R27, R29, R37	Resistor, 27K
26	5010-09342-00	R21	Resistor, 36K
27	5010-08824-00	R20	Resistor, 43K
28	5010-09333-00	R24	Resistor, 180K
29	5010-08846-00	R25	Resistor, 220K
30	5010-10258-00	R14	Resistor, 1M
31	5010-09179-00	R9	Resistor, 3.3M
32	5010-09534-00	W1, W3, W6	Resistor, 0Ω

Item	Part No.	Ckt Designator	Description
33	5043-09844-00	C1	Capacitor, 47 pfd
34	5043-09492-00	C7	Capacitor, 100 pfd
35	5046-09350-00	C33	Capacitor, 180 pfd
36	5046-09346-00	11	Capacitor, 1200 pfd
37	5046-09348-00	C12	Capacitor, 4700 pfd
38	5043-09845-00	C20, C29 - C32	Capacitor, .001 µfd
39*	5043-08980-00	C2, C13, C14, C16, C22	Capacitor, .01 µfd
40	5043-08996-00	C18, C24	Capacitor, 0.1 µfd
41	5043-10642-00	C34	Capacitor, 1 µfd, 50V, radial
42	5040-09343-00	C3 - C6, C8, C9	Capacitor, 10 µfd, electr., 20V, axial
43	5040-10974-00	C26, C27	Capacitor, 100 µfd, electr., 35V, radial
44	5040-09776-00	C17, C23	Capacitor, 470 µfd, electr., 16V, radial
45	5040-12006-00	C19, C25	Capacitor, 1000 µfd, electr., 16V, radial
46	5041-09493-00	C21	Capacitor, 10 µfd, tant., axial
47	5551-09822-00	L1,L2	Inductor, 4.7 µH, 3A
48	5791-10862-04	J1, J2, J8, J9	Connector, 4 pin (Hdr)
49	5791-10862-06	J3	Connector, 6 pin (Hdr)
50	5791-09437-00	J4	Connector, 20 pin, (Hdr) Ribbon Cable
51	5700-10176-00		IC Socket, 28 pin
a)	A-5343-549-5	U4	IC, B/G Sp. & Sound ROM 1
b)	A-5343-549-6	U19	IC, B/G Sp. & Sound ROM 2
c)	A-5343-549-7	U20	IC, B/G Sp. & Sound ROM 3
52	5700-08985-00		IC Socket, 40 pin
a)	5400-10320-00	U5	IC, µProcessor, MC68B09E
53	5700-09004-00		IC Socket, 24 pin
a)	5370-11086-00	U9	IC, Sound Processor, YM2151
54	5700-09006-00		IC Socket, 16 pin
a)	5371-11087-00	U10	IC, D/A Conv, YM3012
55	5521-10931-00	CR1	Oscillator, 8 MHz
56	5520-09020-00	X1	Crystal, 3.58 MHz

Notes: * 14 capacitors (shown on diagram with "B" symbol) also provide +5VDC filtering for ICs.
All capacitors are ceramic, 50v, axial, unless otherwise noted.
All resistors are 5%, 1/4w, Carbon Film, unless otherwise noted.

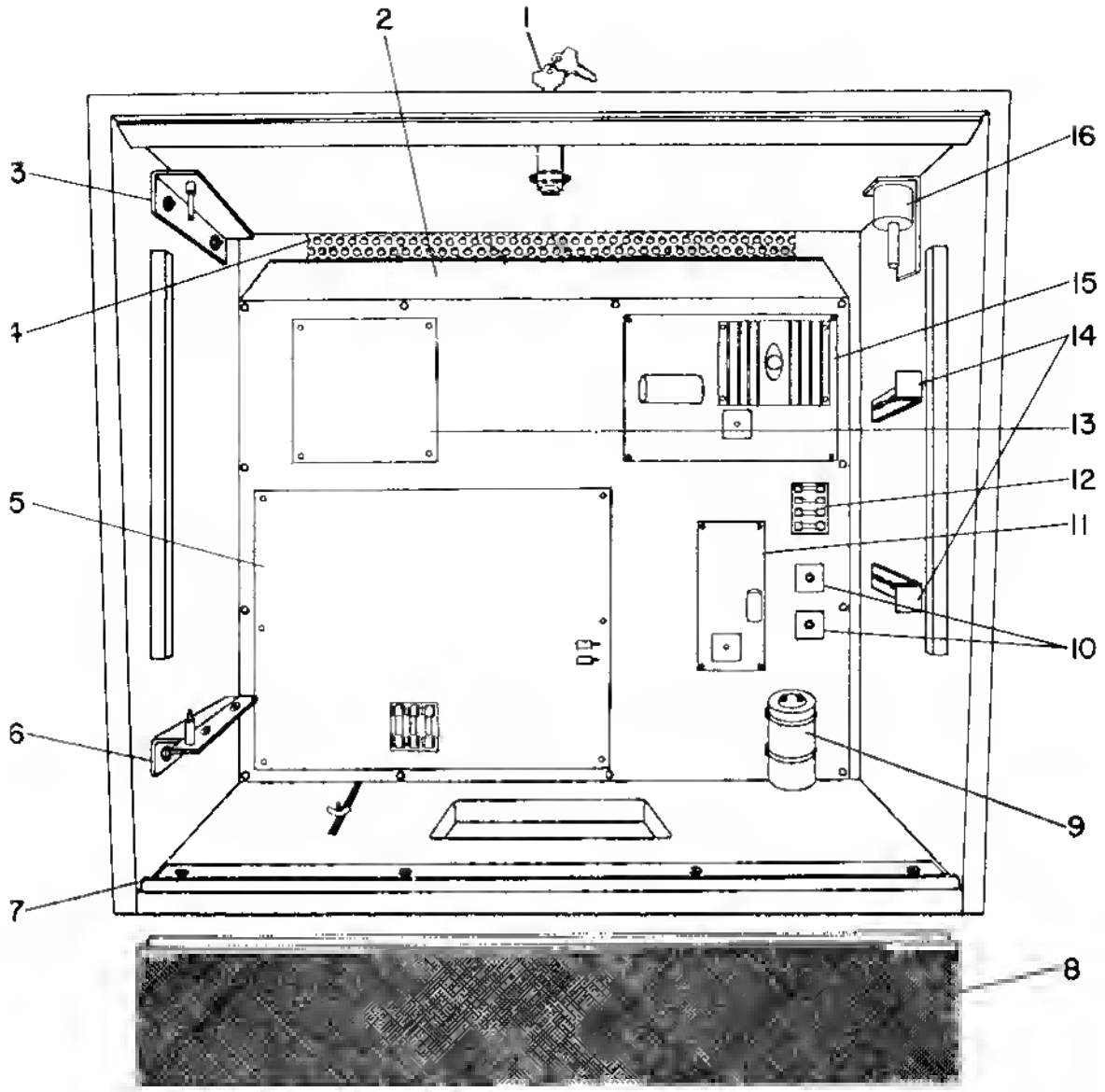

Backbox Parts Listing

Item	Part No.	Description	Item	Part No.	Description
1	20-6542-TB	Cam Lock	9	5040-09051-00	Capacitor, 30,000 µFd., 25V
a)	01-7993-1	Lock Pawl, Backglass	10	5100-09418-00	Bridge Rectifier, 100v, 35A.
2	D-11032	PCB Plate Assembly	11	C-9939	Flipper Power Supply
3	A-7984	Upper Insert Bd. Hinge Assy	12	5733-10702-01	Fuse Holder
4	01-6645	Venting Screen	13	D-11297-549	B/G Speech & Sound Board
5	D-11392-549	System 11A CPU, PIN•BOT	14	01-8084	Insert Stop Bracket
6	A-10815	Lower Insert Board Hinge Assy	15	D-8345-549	Power Supply Assembly
7	01-8081	Lower Speaker Panel Bracket	16	B-10686	Knocker Assembly
8	C-11375	Speaker Panel Assembly		20-9518	Backbox Hinge

The following are parts of the "Top" Backbox Flasher Assembly:

D-11380	Flashbar & Cable Assembly
D-11381	Dome Assembly, Backbox Flasher
RM-22-04	Tape, Dome Cover (silver mylar)
03-8060	Dome Light

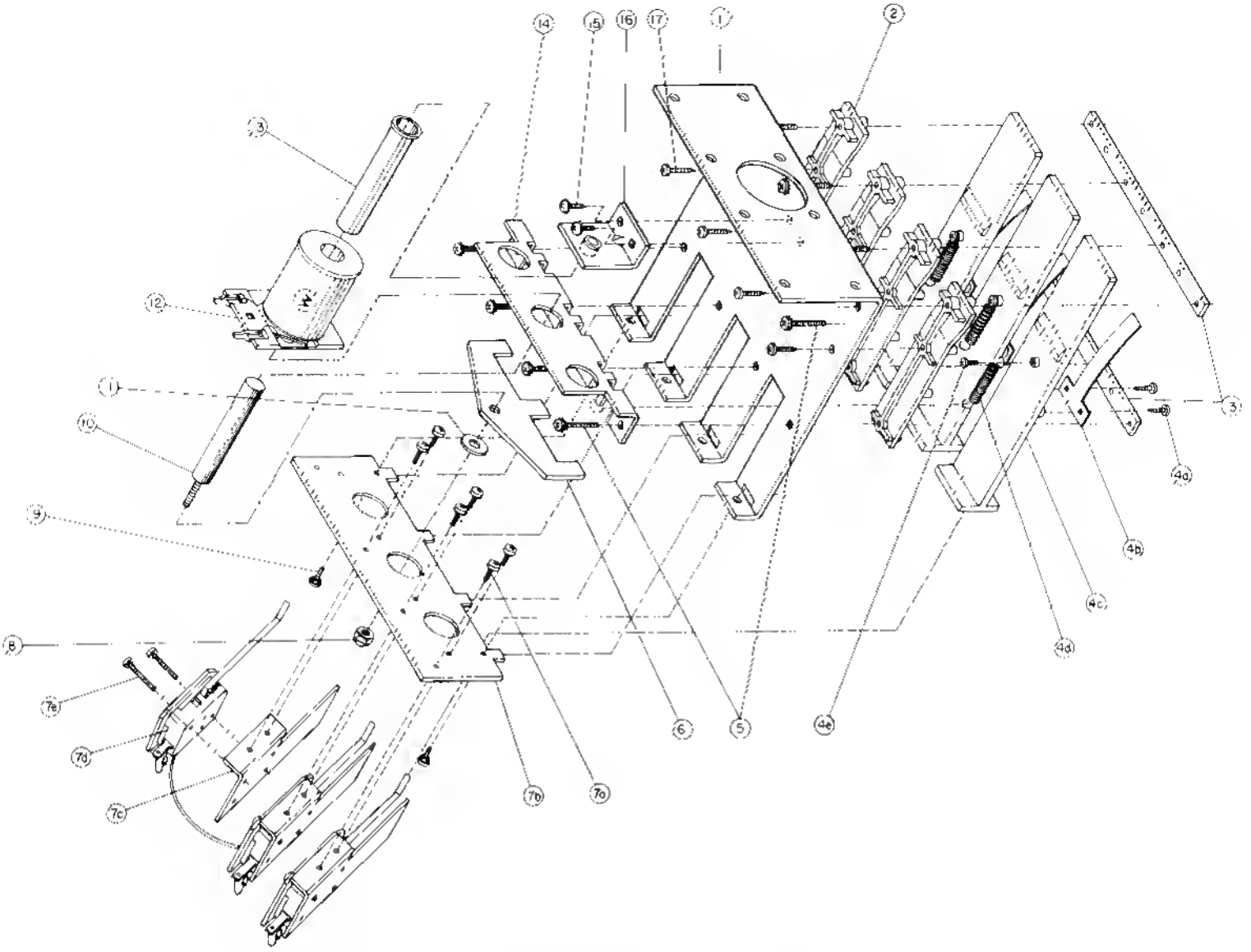

3-Bank Drop Target Assembly

p/n D-9355

Item	Part No.	Description
1	01-7567	Drop Target Frame
2	03-7479	Drop Target Guide
3	01-6450-3	Target Retaining Bar
4	B-8451	Drop Target Assembly
a)	4104-01001-04	Sheet Metal Screw, #4 x 1/4, P-PH-A
b)	01-7037	Target Backup Blade
c)	03-7478	Drop Target
d)	10-364	Target Retractor Spring
e)	4104-01001-04	Sheet Metal Screw, #4 x 1/4, P-PH-A
5	4006-01003-15	Mach. Screw, 6-32 x 15/16, P-PH-S
6	01-7036	Reset Plate
7	B-9354	Switch & Bracket Assembly
a)	4006-01003-03	Mach. Screw, 6-32 x 3/16, P-PH-S
b)	01-7517	Switch Mounting Bracket
7c)	01-7495	Switch Bracket
d)	17-1042	Drop Target Switch
e)	4004-01003-10	Mach. Screw, 4-40 x 5/8, P-PH-S
8	4410-01132-00	Nut, 10-32 ESN
9	4006-01017-04	Mach. Screw, 6-32 x 1/4
10	02-3972	Drop Target Plunger
11	4700-00023-00	Washer, 13/16 o.d. x 5/8 i.d., 16 ga.
12	AE-23-800-04	Coil Assembly
13	03-7066-4	Coil Sleeve
14	01-6451-3A	Coil Support Angle
15	4006-01017-04	Mach. Screw, 6-32 x 1/4, P-RH-S
16	A-8037	Coil Stop Assembly
17	4106-01001-07	Sheet Metal Screw, #6 x 7/16, P-PH-ST

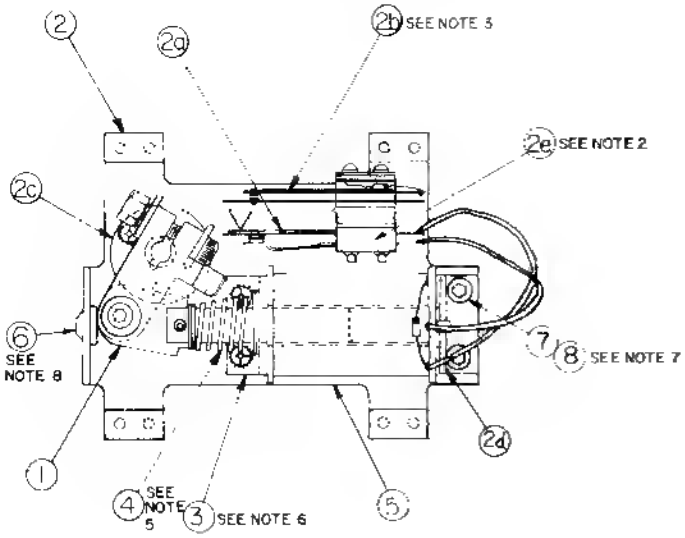

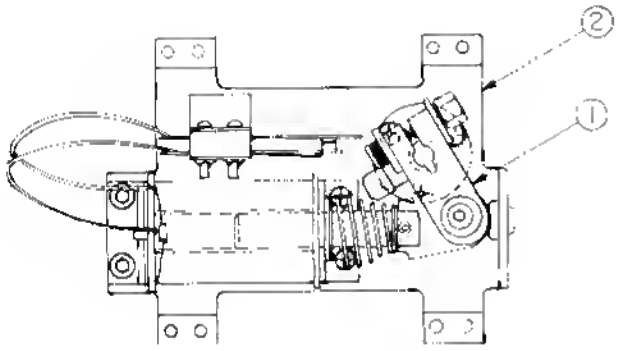

Flipper Assembly
p/n C-9952-L
(Parts listed replace same items of C-9952-R)

Item	Part No.	Description
1	B-10655-L	Crank Link Assembly
g)	B-10657-L	Flipper Crank Assembly, Left
1.)	01-8073-L	Flipper Crank, Left
2	C-9954-L	Flipper Base/Lane Change Assy, L.

Flipper Assembly
p/n C-9952-R

Item	Part No.	Description
1	B-10655-R	Crank Link Assembly
a)	02-4179	Link Spacer Bushing
b)	4010-01086-14	Cap Screw, 10-32 x 7/8, SH
c)	4700-00023-00	Washer, 5/8 o.d. x 13/64 i. d. x 16 ga.
d)	4701-00004-00	Lockwasher, #10 split
e)	4410-01132-00	Nut, 10-32 ESNA
f)	A-10656	Flipper Link Assembly
1.)	02-4219	Coil Plunger
2.)	20-9370-1	Spring Pin, 5/32 dia. x 7/16
3.)	03-8050	Flipper Link
g)	B-10657-R	Flipper Crank Assembly, Right
1.)	01-8073-R	Flipper Crank, Right
2.)	17-1037	Crank Washer
3.)	4010-01066-18	Cap Screw, 10-32 x 1-1/8, HCS
4.)	4410-01127-00	Nut, 10-32 Hex Hd.
5.)	4700-00107-00	Washer, 5/8 o.d. x 13/64 i. d. x 12 ga.
6.)	4701-00004-00	Lockwasher, #10 split
7.)	RM-23-06	Tubing, H. S. 1/4 DWP
2	C-9954-R	Flipper Base/Lane Change Assembly, R.
a)	06-14G	Insulating Blade
b)	SW-1A-150	Lane Change Switch
c)	03-7568	Flipper Bushing
d)	A-10821	Flipper Stop Assembly
e)	03-7811	End of Stroke (EOS) Switch
3	01-7695	Solenoid Bracket
4	10-376	Coil Plunger Spring
5	FL-23/600-30/2600	Flipper Coil
6	23-6577	Bumper Plug
7	4010-01066-06	Cap Screw, 10-32 x 3/8, AH
8	4710-00004-00	Lockwasher, #10 split

NOTES
1. Each Flipper Assembly is mounted below the playfield, in conjunction with the plastic flipper and shaft (20-9250) and flipper rubber (23-6519) (on the upper side of the playfield)
2. The tip of the EOS Switch must travel .015 (+ .010 - 000 inch) before the contacts fully open with the flipper in the actuated position. The EOS Switch contacts must have a gap of .062 (+ .015) inch. Any adjustment of the EOS Switch must be made at a minimum distance of .25 inch from the switch body.
3. The Lane Change Switch must have a gap of .046 (+ .015) inch when fully open.
4. All moving elements of the assembly must operate freely without any evidence of binding.
5. Coil plunger spring must fit within the four lugs of the solenoid bracket.
6. For coil replacement, remove solenoid bracket (item 3) to prevent screw damage.
7. Use Loctite when reassembling flipper stop bracket screws.
8. When using bumper plug on older flipper assemblies, readjust flipper position.
9. Solid color grey (or blue) wire connects to the banded end of the diode mounted on the connector end of flipper coil (item 5). Wire with trace color connects to the unbanded end of the diode.

Chest Lamp Matrix Board
p/n C-11310

Part No.	Ckt. Designator	Description
C-11309		Chest Lamp Matrix Bd. Assy
5768-12062-00		Bare P. C. Board
5070-09054-00	D1 - D25	Diode, 1N4004
5010-09354-00	W1 - W8	Resistor, 0Ω,1/4w, Car. Film
24-8767		Lamp Socket, PCB Twist
24-8768	Lamps: 28 - 32, 36 - 40, 44 - 48, 52 - 56, 60 - 64	Lamp, #555

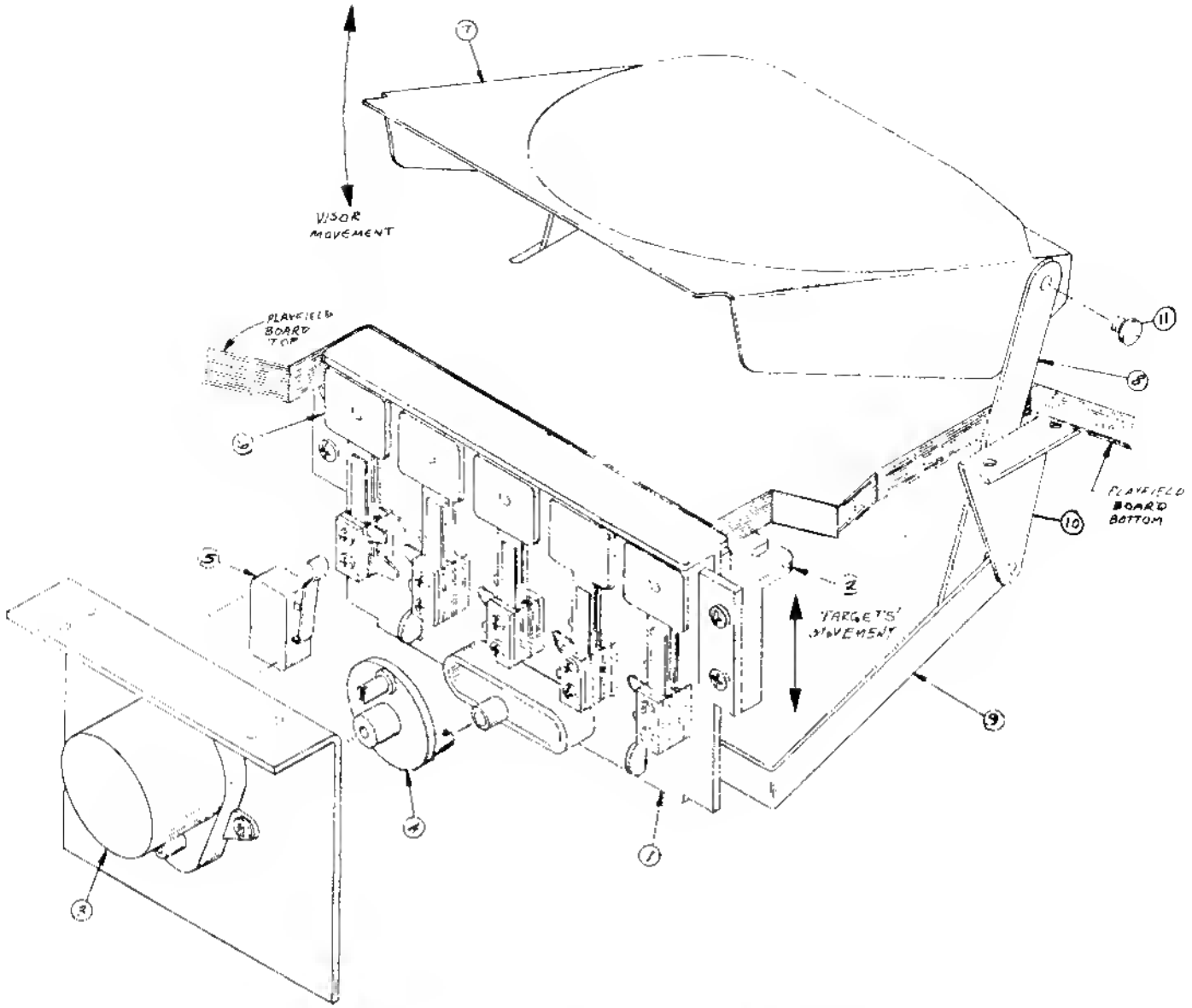

Visor & Targets Mechanism

Item	Part No.	Description
1	B-11156	Targets Carrier
2	03-8026	Target Guide
3	14-7941	Motor
4	A-11154	Motor Cam
5	5647-10529-00	Limit Switch
6	03-8028	Carrier Retainer
7	C-11159	Visor Assembly
8	01-8369	Connecting Link
9	A-11122	Lever Arm
10	A-11117	Mounting Brkt & Post Assy
11	02-4265	Connecting Pin

Visor Assembly
p/n C-11159

Item	Part No.	Description
1	C-11158	Visor Rivet Assembly
2	01-8366	Pivot Bracket
3	02-4264	Hinge Pin
4	20-8712-18	"E" Ring, 3/16" shaft

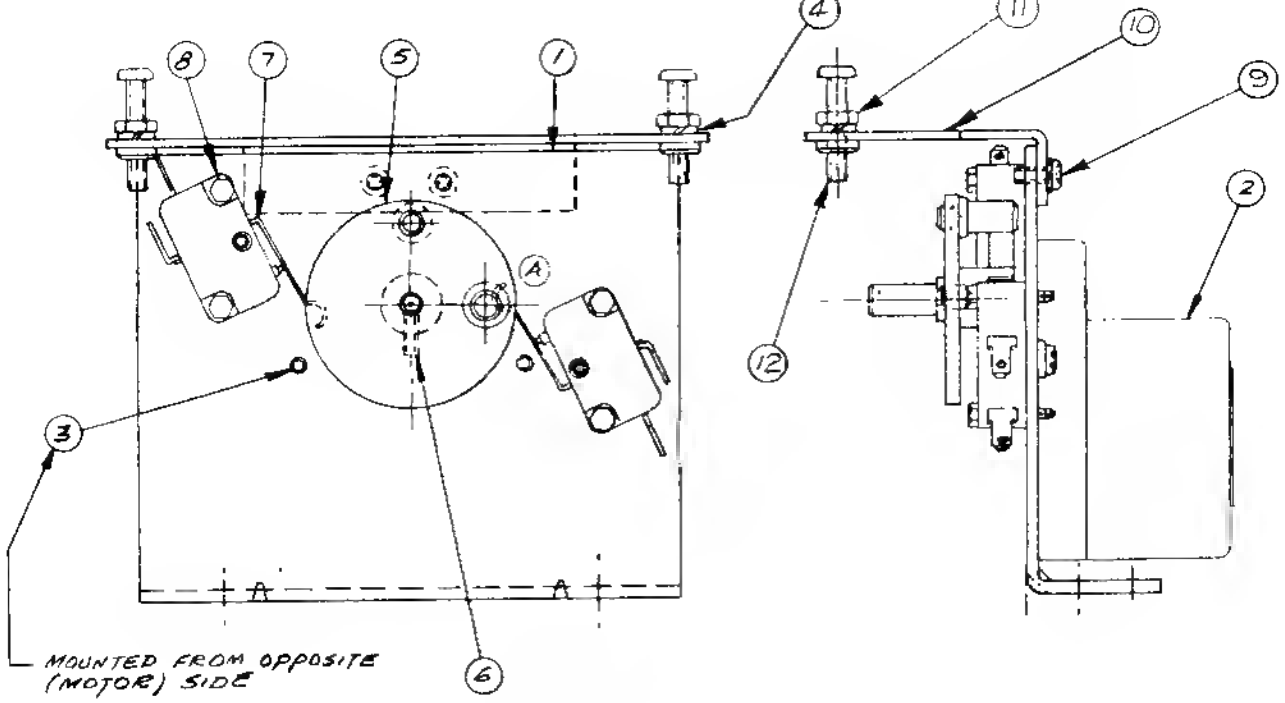

Visor Motor Assembly

p/n B-11169

Item	Part No.	Description	Item	Part No.	Description
1	01-8368	Motor Mounting Bracket	8	4004-01070-10	Mach. Screw, 4-40 x 5/8, Plain Hex Head
2	14-7941	Motor, 11 rpm, 24VAC			
3	4006-01005-06	Mach. Screw, 6-32 x 3/8,	9	4006-01003-04	Mach. Screw, 6-32 x 1/4, P-PH-S
4	4701-00003-00	Lockwasher, #8 split			
5	A-11154	Motor Cam Assembly	10	A-11121	Adj Bracket Assy
6	4008-01076-06	Set Screw, 8-32 x 3/8, CP	11	4408-01117-00	Nut, 8-32 Hex
7	5647-10529-00	Switch, Snap Action	12	4008-01005-16	Mach. Screw, 8-32 x 1, P-PH

Visor Teeth Target Carrier Assembly

p/n B-11156

Part No.	Description	Part No.	Description
C-11176	Switch & Cable Assembly	01-3670-1	Switch Plate, Flat
A-11177	Switch & Diode Assembly	03-8025	Target Carrier
A-11315-1	Switch & Diode Assembly	23-6534-9	Edge Protector
A-11315-2	Switch & Diode Assembly	4004-01003-12	Mach. Screw, 4-40 x 3/4, P-PH-S
A-11315-3	Switch & Diode Assembly	4404-01119-00	Nut, ESNA 4-40
A-11315-4	Switch & Diode Assembly	03-7655-4	Harness Clip, 1/4
H-11323	Visor Target Cable	4700-00003-00	Washer, Flat: 1/8 i.d. x 9/32 o.d. x 21 ga.
HW-30022-4	Wire, 22 AWG, yellow, 11"		

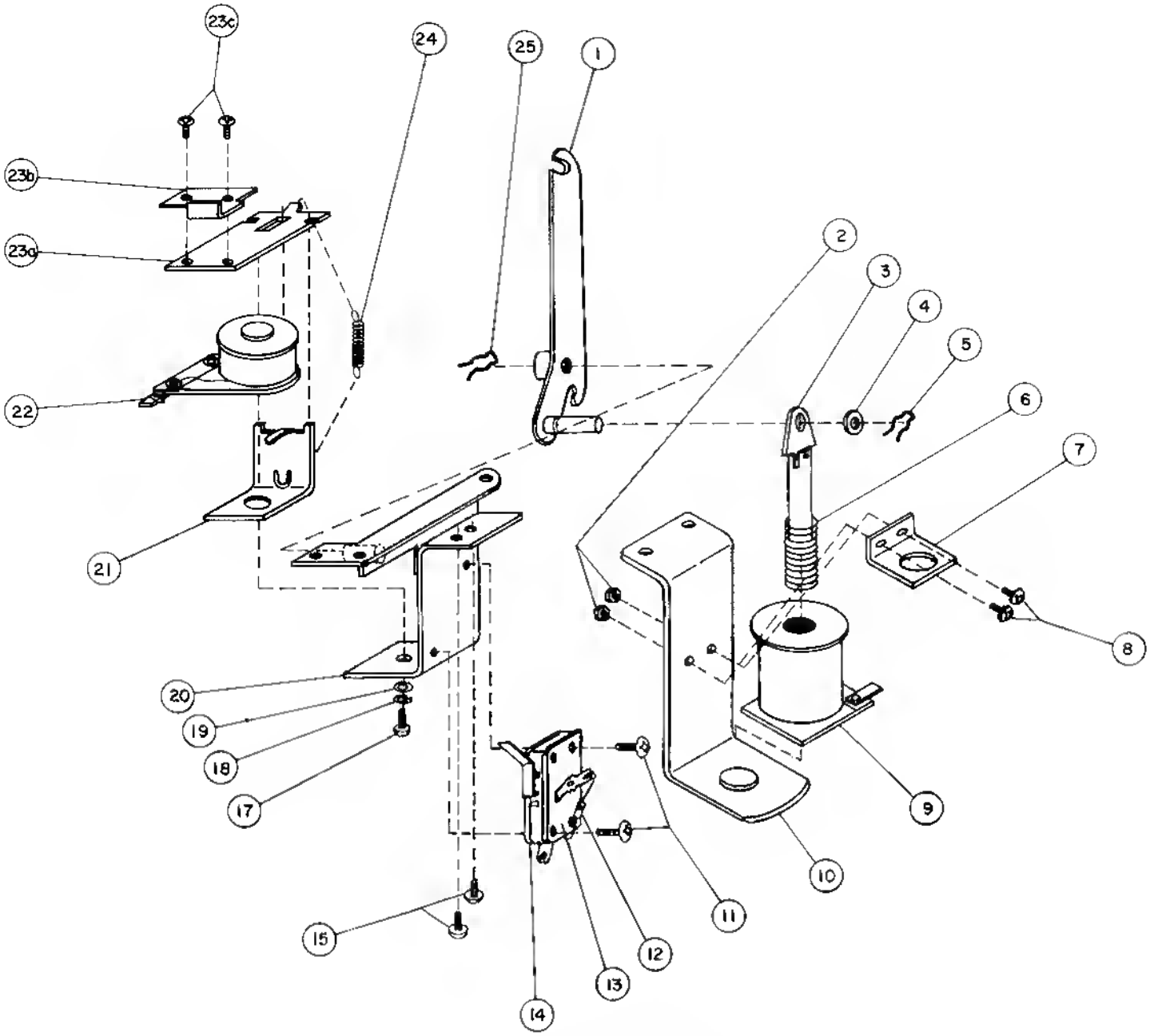

Ramp Lifting Mechanism

p/n B-11304

Item	Part No.	Description	Item	Part No.	Description
1	A-11137	Lift Crank Assembly	15	4004-01003-05	Mach. Screw, 4-40
2	4406-01119-00	Nut, 6-32 ESN	16		Not Used
3	A-8050	Plunger Assembly	17	4008-01021-07	Mach. Screw, 8-32 x 7/16
4	4700-00073-00	Washer, .281 i.d. x .500 o.d.	18	4701-00003-00	Lockwasher, #8 Split
5	12-6227	Retaining Clip	19	4700-00089-00	Washer, .172 i.d. x 7/16 o.d.
6	10-128	Spring	20	B-11302	Lift Mech Bracket Assembly
7	01-8-508-S	Coil Retaining Bracket	21	A-6892	Frame and Eyelet
8	4006-01017-06	Mach. Screw, 6-32 x 3/8	22	SM-26-600-DC	Coil Assembly
9	AE-24-900-02	Coil Assembly	23	A-11139	Armature Assembly
10	B-7572-1	Bracket & Stop Assembly	a)	A-8936	Armature Subassembly
11	4004-01003-10	Mach. Screw, 4-40 x 5/8	b)	01-8390	L Crank Lock
12	5070-06258-00	Diode, 1N4001	c)	4006-01003-03	Mach. Screw , 6-32 x 3/16
13	A-7438-1	Terminal Strip	24	10-363	Extension Spring
14	5647-12001-00	Microswitch	25	12-6227	Retaining Clip

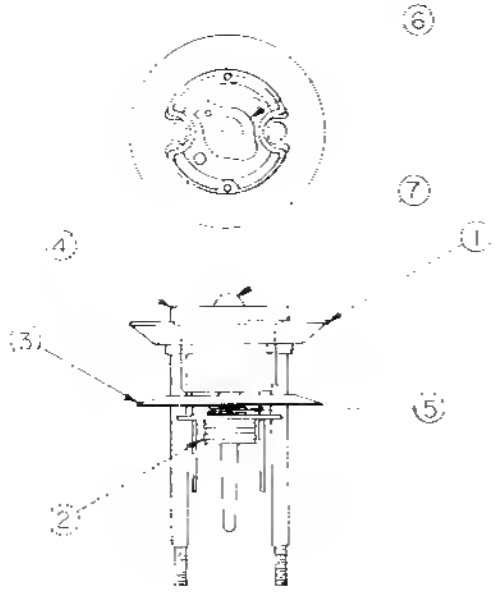

B-9414 JET BUMPER ASSEMBLY

ITEM	PART NO.	DESCRIPTION
1	A-4754	Bumper Ring Assembly
2	03-6009 A5	Bumper Base
3	03-6035-5	Bumper Wafer
4	03-7443-5	Bumper Body
5	10-7	Bumper Spring
6	24-6416	Bumper Socket
7	24-6549	#44 Bulb

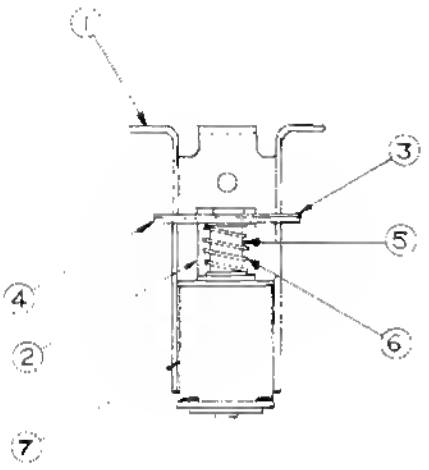

B-9415 JET BUMPER COIL ASSEMBLY

ITEM	PART NO.	DESCRIPTION
1	B-7417	Bracket and Slop Assembly
2	01-1747	Coil Retaining Bracket
3	01-5492	Armature Link Steel
4	01-5493	Armature Link Bakelite
5	02-3406-1	Coil Plunger
6	10-326	Armature Spring
7	SG1 23-850-DC	Solenoid Coil

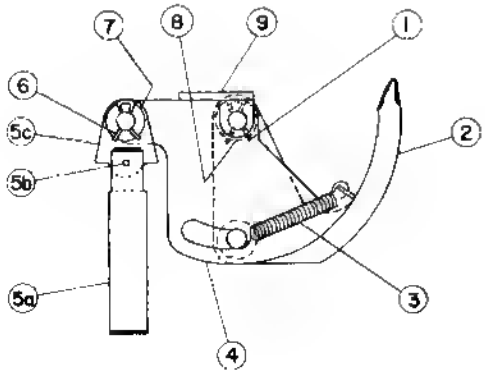

Ball Eject Assembly, Right

p/n B-9361-R-1

Item	Part No.	Description
1	12-6227	Clip, Hair Pin
2	A-7471-R	Ball Eject Cam Assembly
3	10-362	Spring
4	A-6949-R	Spring Plate
5	A-8050-1	Plunger Assembly
a)	02-3407-2	Coil Plunger
b)	20-8716-5	Roll Pin
c)	01-1789	Armature Link
6	12-6227	Clip, Hair Pin
7	4700-00030-00	Washer, 1/2 o.d. x 17/64 i.d. x 15 ga.
8	4700-00103-00	Washer, 1/2 o.d. x 17/64 i.d. x .015 thk.
9	A-6950-R	Mounting Bracket Assembly

Ramp Exit Playfield Assembly
p/n C-11248

Part No.	Description	Part No.	Description
C-11249	Mini-playfield Assembly	4106-01019-08	Sh. Met. Screw, #6 x 1/2", P-RH-A
03-8044-9	Bumper Post	4106-01042-08	Sh. Met. Screw, #6 x 1/2", P-FLH-A
31-1006-549-7	Playfield Plastic	02-4195	Bumper Post
31-1006-549-2	Playfield Plastic	4406-01119-00	Nut, 6-32 Hex
31-1006-549-6	Playfield Plastic	4700-00090-00	Washer,.156 i.d. x .375 o.d. x .030
23-6535	Ball Guide Bumper	23-6302	Rubber Ring, 1"
23-6304	Rubber Ring		

Ramp Assembly
p/n D-11166

Part No.	Description	Part No.	Description
D-11167	Ramp Subassembly	01-8465	Insulator
A-11384	Ramp Wire & Bracket Assy	03-8044-9	Plastic Post
A-11331	Ramp R/over Wire Sw. Assy	23-6535	Ball Guide Bumper
01-3670-1	Switch Plate, Flat	03-7866-26	Playfield Insert
4404-01117-00	Nut, 4-40 Hex	03-7007-4	Switch Tubing
H-11329	Ramp Cable	4004-01005-10	Mach. Screw, 4-40 x 5/8, P-PH
4106-01019-08	Sh. Met. Screw, #6 x 1/2", P-RH-A		

Miscellaneous PIN•BOT Parts

Part No.	Description
31-1002-549	PIN•BOT Screened Playfield
31-1357-549	PIN•BOT Backglass
31-1401	Drop Target Decal
31-1006-549	PIN•BOT Plastics Set
5555-10779-00	Speaker, 8Ω, 30w,4 x 10
20-9269	Standoff, 1/2", P-nut (on PCB)
01-6571	Mounting Bracket, Hinge, Insert Bd.
01-6652	Stop Bracket
01-6655	Latch - Insert Board
11-549-IN	PIN•BOT Wood Insert
5795-10868-14	Ribbon Cable, 26-conductor, 14"
5795-10937-06	Ribbon Cable, 20-conductor, 6"
5795-10938-22	Ribbon Cable, 26-conductor, 22"
5795-09941-00	Ribbon Cable, 20-conductor, 18"
03-7960-549-1	Playfield Mylar*
01-8431	Playfield Post Adj Nut Plate
31-1402-1	Helmet Cover (over ramp)*
31-1402-2	Visor Cover*
31-1402-3	NASA Ramp Cover (left side)*
31-1402-4	Right Ramp Cover*
31-1402-5	Shuttle Decal (assembles on C-11299)*
31-1402-6	20,000 (Vortex upper)*
31-1402-7	100,000 (Vortex middle)*
31-1402-8	Vortex Exit*
31-1402-9	5,000 (Vortex lower)*

* available separately

Playfield Parts

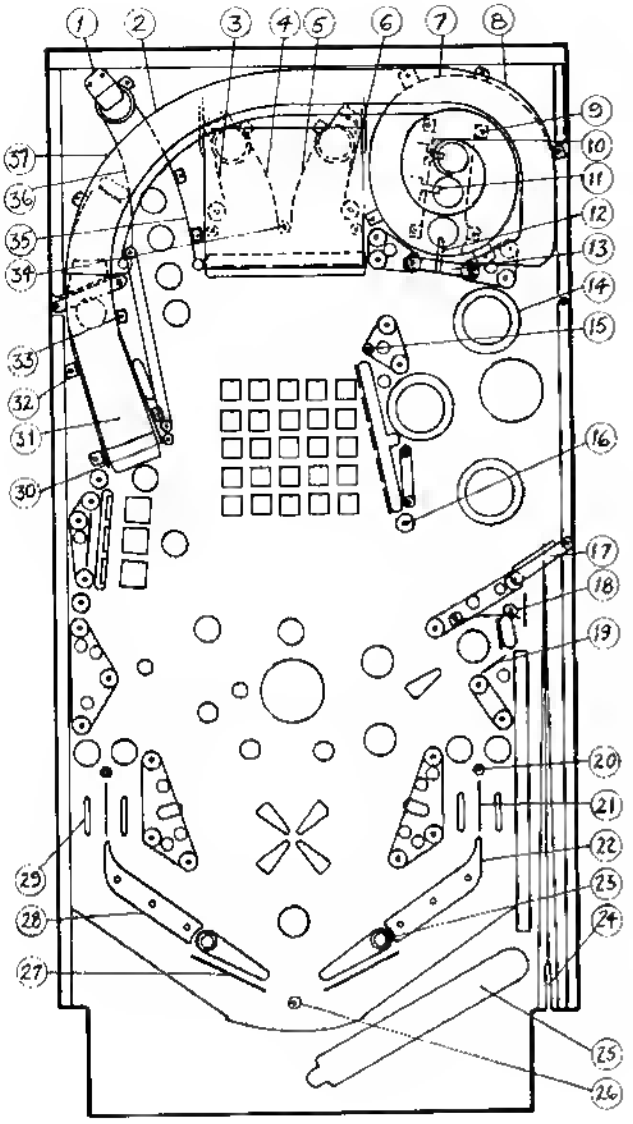

Item	Part No.	Description
1	01-6933	Eject Hole Stop
2	D-11166	Ramp Assembly
3	12-6466-6	Ballguide Wire
4	A-11242	Left Ball Guide Assembly
5	A-11241	Right Ball Guide Assembly
6	12-6466-6	Ballguide Wire
7	B-11152	"Vortex" Ramp (less decals)
8	B-11111	Ball Guide Assembly
9	A-11120	Ball Guide Assembly
10	A-11118	Ball Guide & Wire Assembly
11	B-11155	Switch Bracket & Wire Assembly
a)	12-6688	Switch Actuator
b)	03-7796-1	Washer, Target Shaft
c)	12-6685	Switch Wireform
d)	A-11115	Switch Bracket Assembly
12	A-5844-35	Rollover Wire & Bracket
13	A-9465-R	Ballgate Assembly
a)	01-6991	Ballgate Bracket
b)	12-6565	Ballgate Wire
14		Jet Bumper Cap
15	02-4008	Playfield Post
16	02-	Playfield Post
17	A-11126	Ballshooter Gate Assembly
18	A-11240	Ballguide Assembly
19	12-6466-4	Wireform
20	02-4008	Playfield Post
21	12-6466-8	Wireform, 2"
22	A-8108-R	Flipper Return Frame
23	20-9250-3	Flipper & Shaft
24	A-5844-46	Rollover Wire & Bracket
25	A-5844-44	Rollover Wireform & Bracket
26	02-4195	Bumper Post, 6-32 Mach. Screw
27	12-6468	Anti-rebound Wire
28	A-8108-L	Flipper Return Frame
29	A-5844-35	Rollover Wireform & Bracket
30	02-4056	Bumper Post
31	B-11239	Lift Ramp Assembly
32	C-11245	Left Guard Rail Assembly
33	B-11243	Right Guard Rail Assembly
34	02-4036	Rubber Bumper
35	B-11247	Ball Guide Assembly
36	12-6469-4	Ball Guide Wire, 4-3/4"
37	D-11166	Ramp Assembly

Parts Not Shown:

C-11299	Vortex Ramp Cover
C-11248	Ramp Exit Playfield Assembly
C-11236	Ball Chute
C-11385	Helmet Assembly
C11159	Visor Assembly

Ramp Mounting Posts:

02-4269-1	3-5/16"
02-4269-2	2-3/4"
02-4275-1	3-1/2"
02-4275-2	3-3/8"
02-4275-3	3-1/16"
02-4275-4	2-15/16"

Solenoids/ Flashers

Item	Part No.	Description
1A	AE-23-800-01	Outhole Kicker
1C	AE-23-800-02	Knocker
2A	AE-23-800-03	Ball Shooter Lane Feeder
2C	#89 Flashlamps	Upper P'fld & "Top" B. Box (#2)
3A	AE-23-800-03	Single Eject Hole
3C	#89 Flashlamps	Insert Board - Left
4A	AE-23-800-04	Drop Target (3-bank)
4C	#89 Flashlamps	Insert Board - Right
5A	AE-24-900-02	Ramp Raise
5C	#89 Flashlamps	Lower P'fld & "Top" B. Box (#1,
6A	SM-26-600-DC	Ramp Down outer)
6C	#89 Flashlamps	Energy Flashers
7A	AE-23-800-03	Left Eye Eject Hole (visor)
7C	#89 Flashlamps	Left Playfield Flasher
8A	AE-23-800-03	Right Eye Eject Hole (visor)
8C	#89 Flashlamps	Sun Flashers
9	#1251 Flashlamps	Robot Face - Insert Board
10	#1251 Flashlamps	Right Visor - Gen. Illumin.
11	5580-09555-00*	Gen. Illumin. Relay - Insert Bd.
12	5580-09555-00*	Gen. Illumin. Relay - Playfield
13	5580-09555-00*	Visor Motor Relay
14	5580-09555-00*	Solenoid Select Relay
15	#89 Flashlamps	"Top" Backbox Flashers (#3)
16	#89 Flashlamps	"Top" Backbox Flashers (#4, center)
17	AE-23-800-03	Lower Jet Bumper
18	#1251 Flashlamps	Left Visor - Gen. Illumin.
19	AE-23-800-03	Left Jet Bumper
20	AE-23-800-03	Left Kicker
21	AE-23-800-03	Right Kicker
22	AE-23-800-03	Upper Jet Bumper
-	FL 23/600-30/2600-50VDC	Right Flipper
-	FL 23/600-30/2600-50VDC	Left Flipper

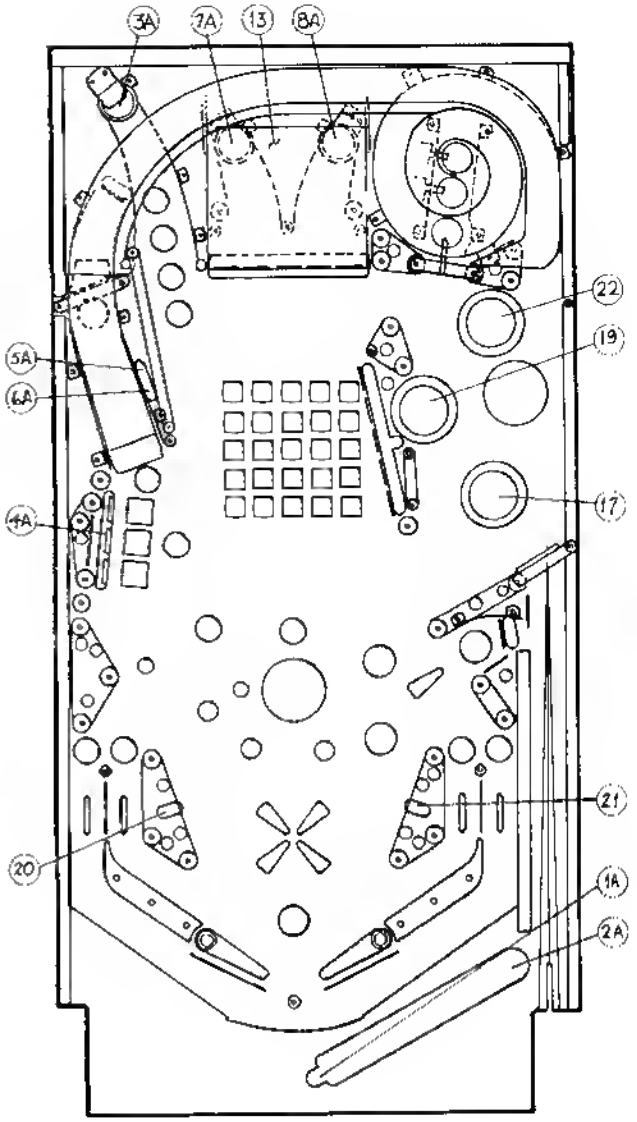

* - with Relay Snubber, C-11232-1

Rubber Parts

Item	Part No.	Description
A	23-6300	5/16" Ring
B	23-6303	1-1/4" Ring
C	23-6304	1-1/2" Ring
D	23-6305	2" Ring
E	23-6306	2-1/2" Ring
F	23-6307	3" Ring
G	23-6308	3-1/2" Ring

Item	Part No.	Description
H	23-6313-1	Grommet
I	23-6327	Ball Shooter Tip
J	23-6420	Grommet
K	23-6519-4	Red Ring
L	23-6535	Bumper
M	23-6552	Sleeving
N	23-6579	3/4" Tapered Bumper

Lamps

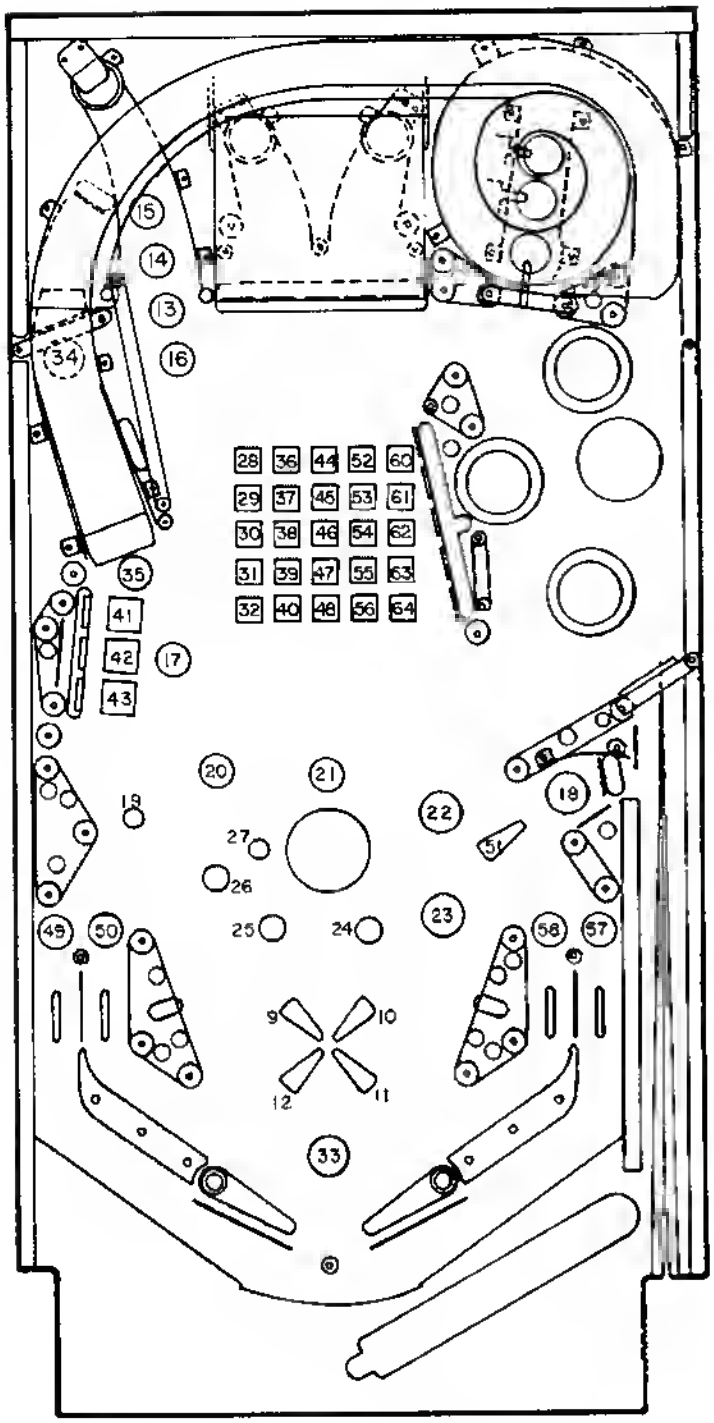

Lamp	Location/Description
1	Game Over (Backbox)
2	Match (Backbox)
3	Ball In Play (Backbox)
4	Mouth 1 (Backbox left)
5	Mouth 2 (Backbox)
6	Mouth 3 (Backbox)
7	Mouth 4 (Backbox)
8	Mouth 5 (Backbox)
9	2X
10	3X
11	4X
12	5X
13	Single Eject's 25K
14	Single Eject's 50K
15	Single Eject's 75K
16	Single Eject's Lites Ex. Ball
17	Drop Target Single Timer
18	Advance Planet
19	Pluto
20	Neptune
21	Uranus
22	Saturn
23	Jupiter
24	Mars
25	Earth
26	Venus
27	Mercury
28	Yellow 1 (upper)
29	Yellow 2
30	Yellow 3 (middle)
31	Yellow 4
32	Yellow 5 (lower)
33	Shoot Again (Playfield)
34	Score Energy
35	Solar Energy Value
36	Blue 1 (upper)
37	Blue 2
38	Blue 3 (mid)
39	Blue 4
40	Blue 5 (lower)
41	Drop Target (upper)
42	Drop Target (middle)
43	Drop Target (lower)
44	Amber 1 (upper)
45	Amber 2
46	Amber 3 (mid)
47	Amber 4
48	Amber 5 (lower)
49	Left Outlane Ex. Ball
50	Left Return Ex. Ball
51	Special
52	Green 1 (upper)
53	Green 2
54	Green 3 (mid)

Lamp	Location/Description
55	Green 4
56	Green 5 (lower)
57	Right Outlane Ex. Ball
58	Right Return Ex. Ball
59	Not Used
60	Red 1 (upper)
61	Red 2
62	Red3 (mid)
63	Red 4
64	Red 5 (lower)

Switches

Item	Part No.	Description
1	A-8476	Plumb Bob Tilt
2	B-6572	Ball Roll Tilt
3	SW-1A-126	Credit Button
4	904845*	Right Coin Chute (* - Coinco p/n)
5	904845*	Center Coin Chute
6	904845*	Lett Coin Chute
7	904704*	Slam Tilt
8	5641-09369-00	High Score Reset
9	SW-1A-117	Playfield Tilt
10	SW-1A-150-1	Left Lane Change
11	SW-1A-150	Right Lane Change
12	SW-1A-124	Left Outlane
13	SW-1A-124	Left Return Lane
14	SW-1A-124	Right Return Lane
15	SW-1A-124	Right Outlane
16	17-1067	Outhole
17	5647-09957-00	Ball Trough #1 (lwr right)
18	5647-09633-00	Ball Trough #2
19	A-11055	Advance Planet
20	SW-1A-138	Ball Shooter Lane
21		Not Used
22	SW-1A-118	Vortex 20K
23	SW-1A-118	Vortex 100K
24	SW-1A-124	Vortex 5K (exit)
25	17-1012	Lett Eye Eject
26	17-1012	Right Eye Eject
27		Not Used
28	SW-1A-161	Visor Target 1 (left, yellow)
29	SW-1A-163-1	Visor Target 2 (blue)
30	SW-1A-163-4	Visor Target 3 (amber)
31	SW-1A-163-2	Visor Target 4 (green)
32	SW-1A-163-3	Visor Target 5 (right, red)
33	SW-1A-163-1	Visor Target top,yellow)
34	A-11317-3	Right 5-bank (top, yellow)
35	A-11317-3	Right 5-bank (blue)
36	A-11317-3	Right 5-bank (amber)
37	A-11317-3	Right 5-bank (red)
38	17-1012	Single Eject
39	SW-1A-164	Ramp Exit
40	SW-1A-164	Ramp Entrance
41		Not Used
42		Not Used
43		Not Used
44	5647-12001-00	Ramp Down
45	A-11054	Score Energy (yellow)
46	5647-10529-00	Visor Closed
47	5647-10529-00	Visor Open
48	A-7459-7	Left Jet Bumper
49	17-1042	Lett Drop Target (upper)
50	17-1042	Lett Drop Target (mid)
51	17-1042	Lett Drop Target (lower)
52	A-7459-7	Top Jet Bumper
53	A-7459-7	Bottom Jet Bumper
	SW-1010A-13	Flipper Button

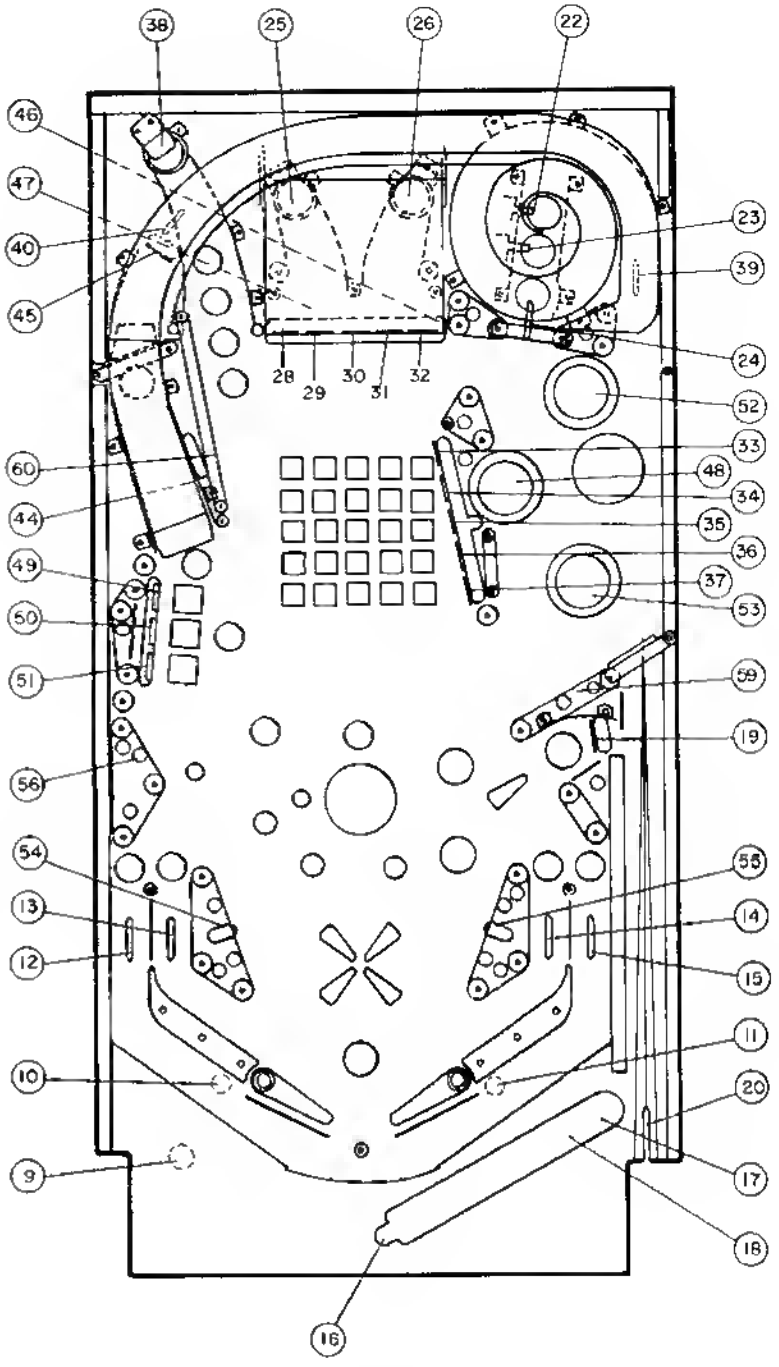

Item	Part No.	Description
54	SW-1A-122	Lett Kicker (scoring)**
55	SW-1A-122	Right Kicker (scoring)**
56	SW-1A-120	10 Point
57		Not Used
58		Not Used
59	SW-1A-120	10 Point
60	SW-1A-120	10 Point
61-64		Not Used

** [Kicker Actuating Sw: A-4834-H; B-8734 w/RC]

Section 3

Reference Diagrams & Schematics

- Diagrams and Schematics:

  Cabinet Wiring
  A/N Master Display Board
  Background Music/Speech Board
  Interboards Signals
  CPU Board
  Power Supply Board
  Displays
  Power Wiring

Cabinet Wiring Diagram

PIN-BOT 54

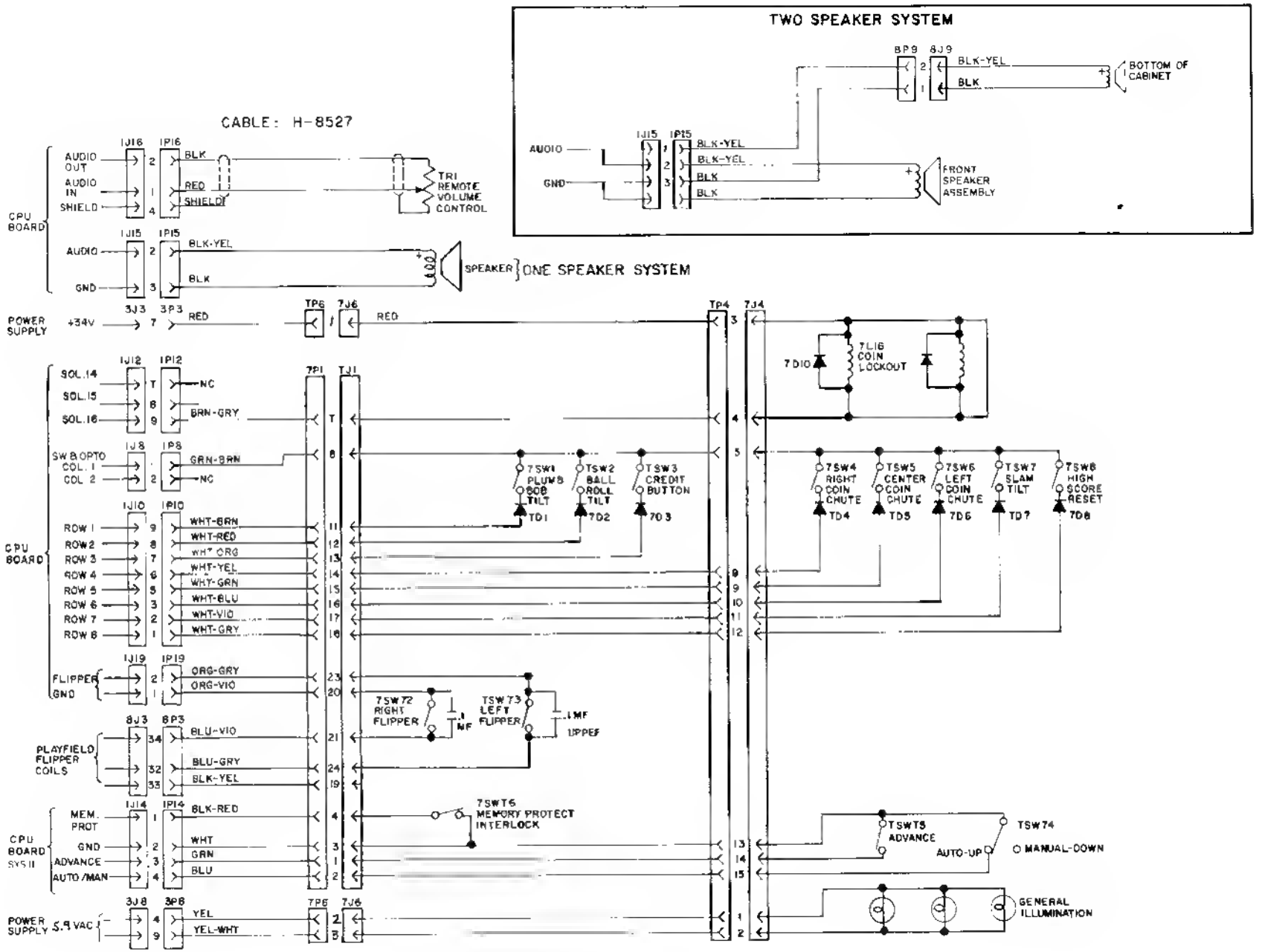

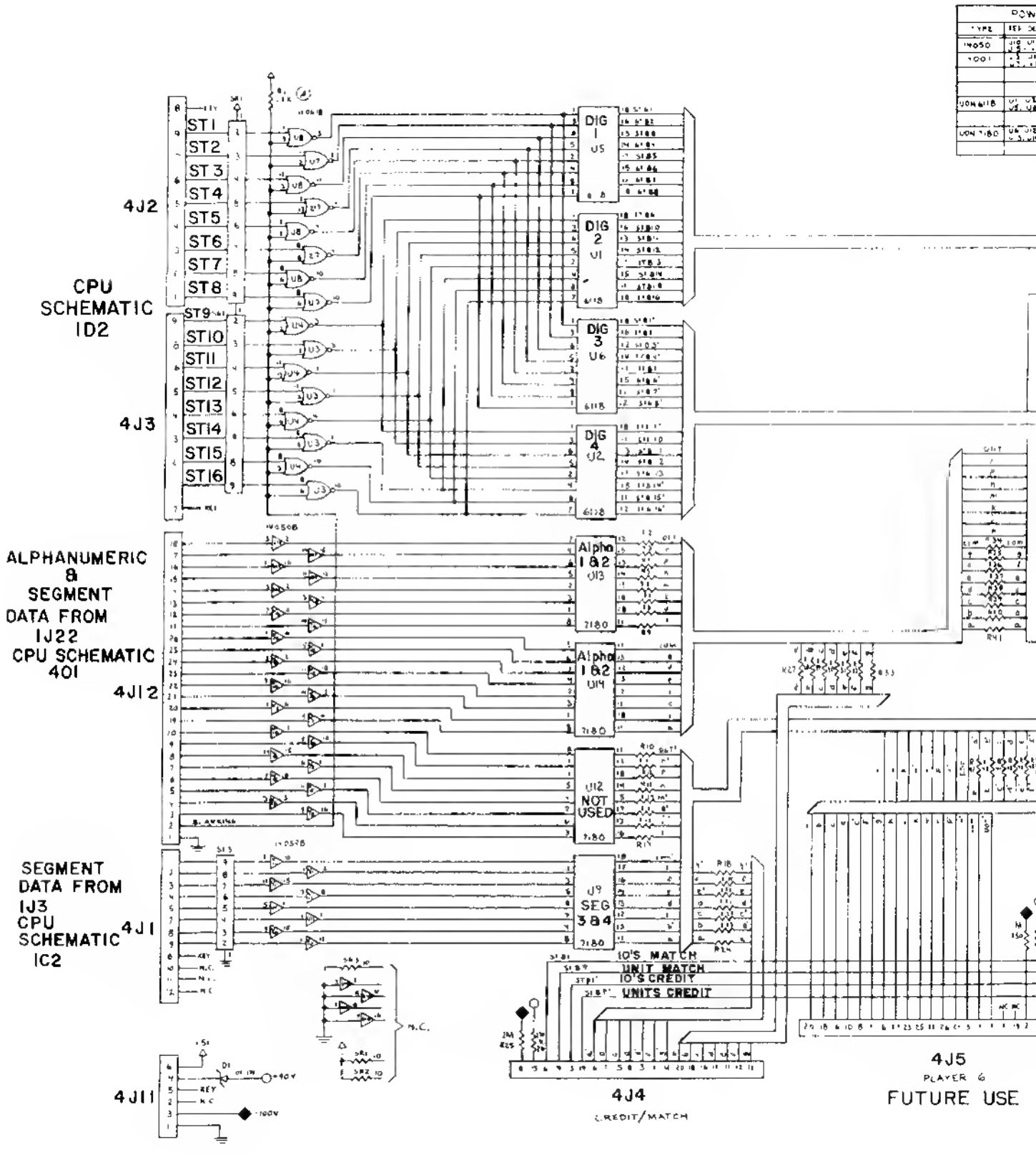
CPU SCHEMATIC ID2
4J2
4J3
ST1
ST2
ST3
ST4
ST5
ST6
ST7
ST8
ST9
ST10
ST11
ST12
ST13
ST14
ST15
ST16
DIG 1 U5
DIG 2 U1
DIG 3 U6
DIG 4 U2
ALPHANUMERIC 8 SEGMENT DATA FROM 1J22 CPU SCHEMATIC 401
4J12
Alpha 1&2 U13
Alpha 1&2 U14
U12 NOT USED
SEGMENT DATA FROM 1J3 CPU SCHEMATIC IC2
4J1
U9 SEG 384
10'S MATCH
UNIT MATCH
10'S CREDIT
UNITS CREDIT
4J4
CREDIT/MATCH
4J5
PLAYER 6
FUTURE USE
4J11
N.C.

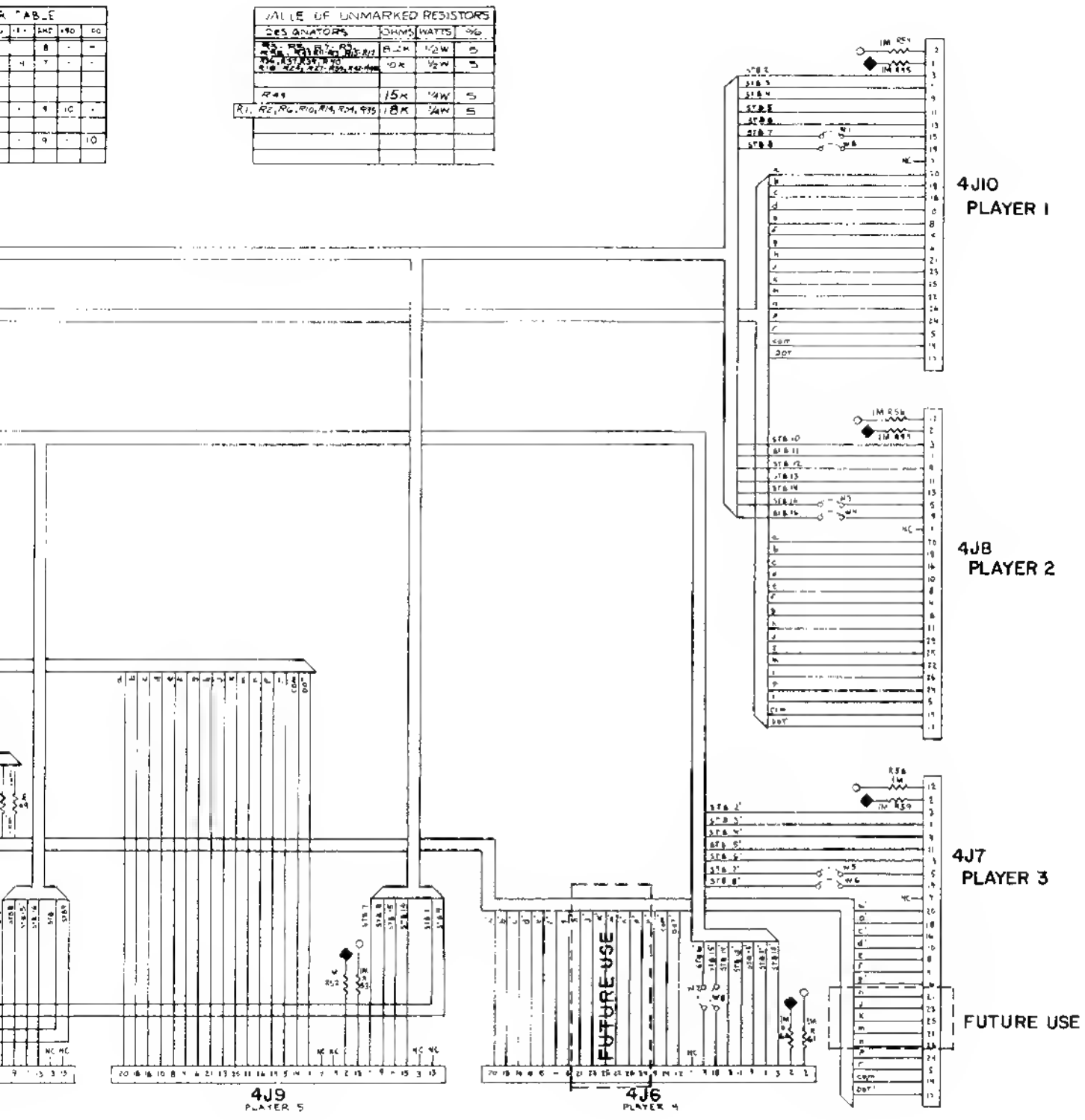

Alphanumeric Master Display Board Schematic

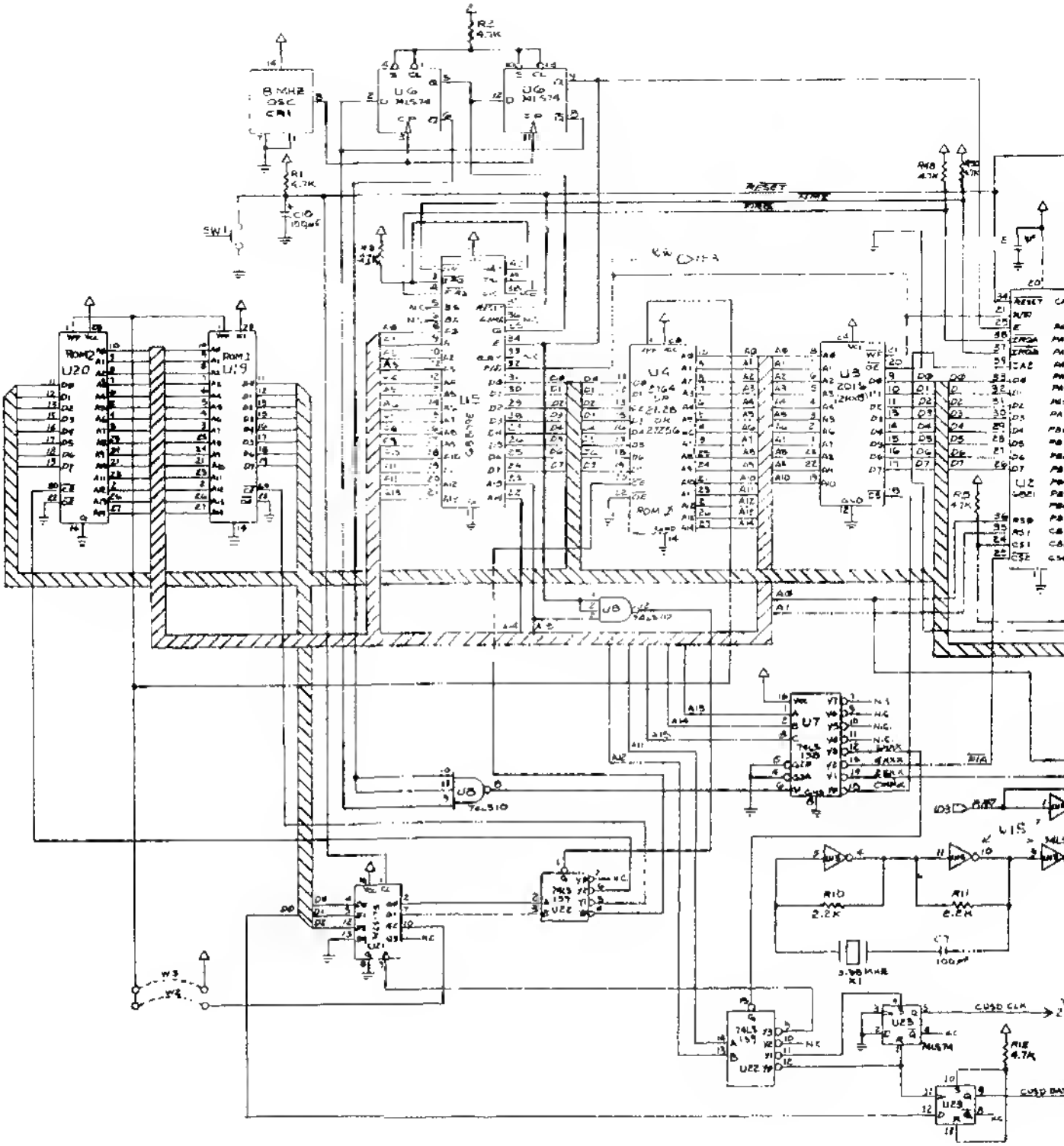

8 MHZ OSC CR1
U6 MLS74
U6 MLS74
R2 4.7K
R1 4.7K
C10 100µF
SW1
RESET
U20
ROM2
U19
ROM1
U5
U4
2164
U3
2016
U2
U8
74LS10
U7
74LS 138
U21
74LS 139
U22
74LS 139
U23
MLS74
U15
R10 2.2K
R11 2.2K
C7 100µF
3.58 MHZ X1
CUSD CLK
R12 4.7K
U23
W3
W2

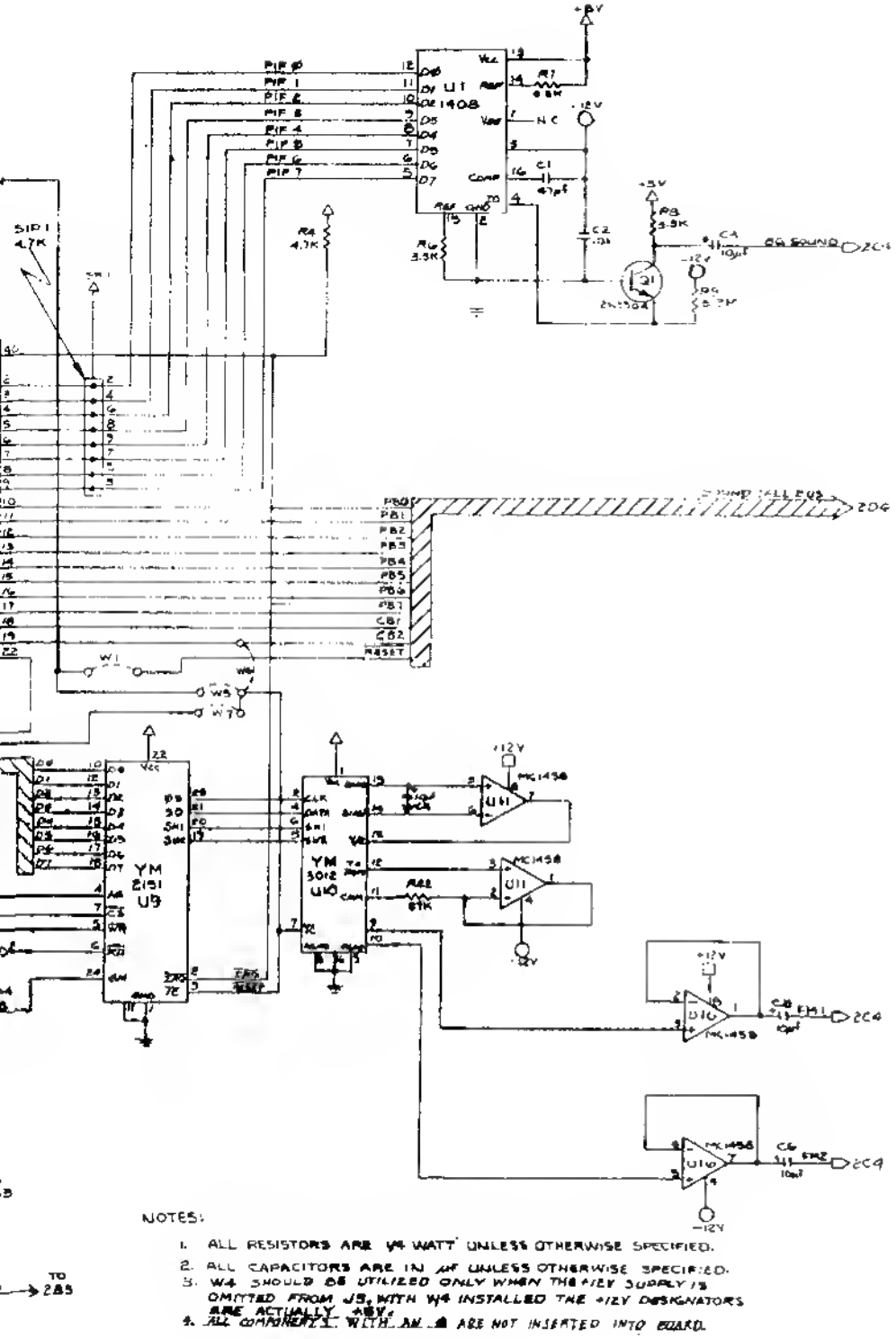

NOTES:

1. ALL RESISTORS ARE ¼ WATT UNLESS OTHERWISE SPECIFIED.
2. ALL CAPACITORS ARE IN µF UNLESS OTHERWISE SPECIFIED.
3. W4 SHOULD BE UTILIZED ONLY WHEN THE +12V SUPPLY IS OMITTED FROM J5, WITH W4 INSTALLED THE +12V DESIGNATORS ARE ACTUALLY +8V.
4. ALL COMPONENTS WITH AN ▲ ARE NOT INSERTED INTO BOARD.

Background Music & Speech Board (D-11297) Schematic

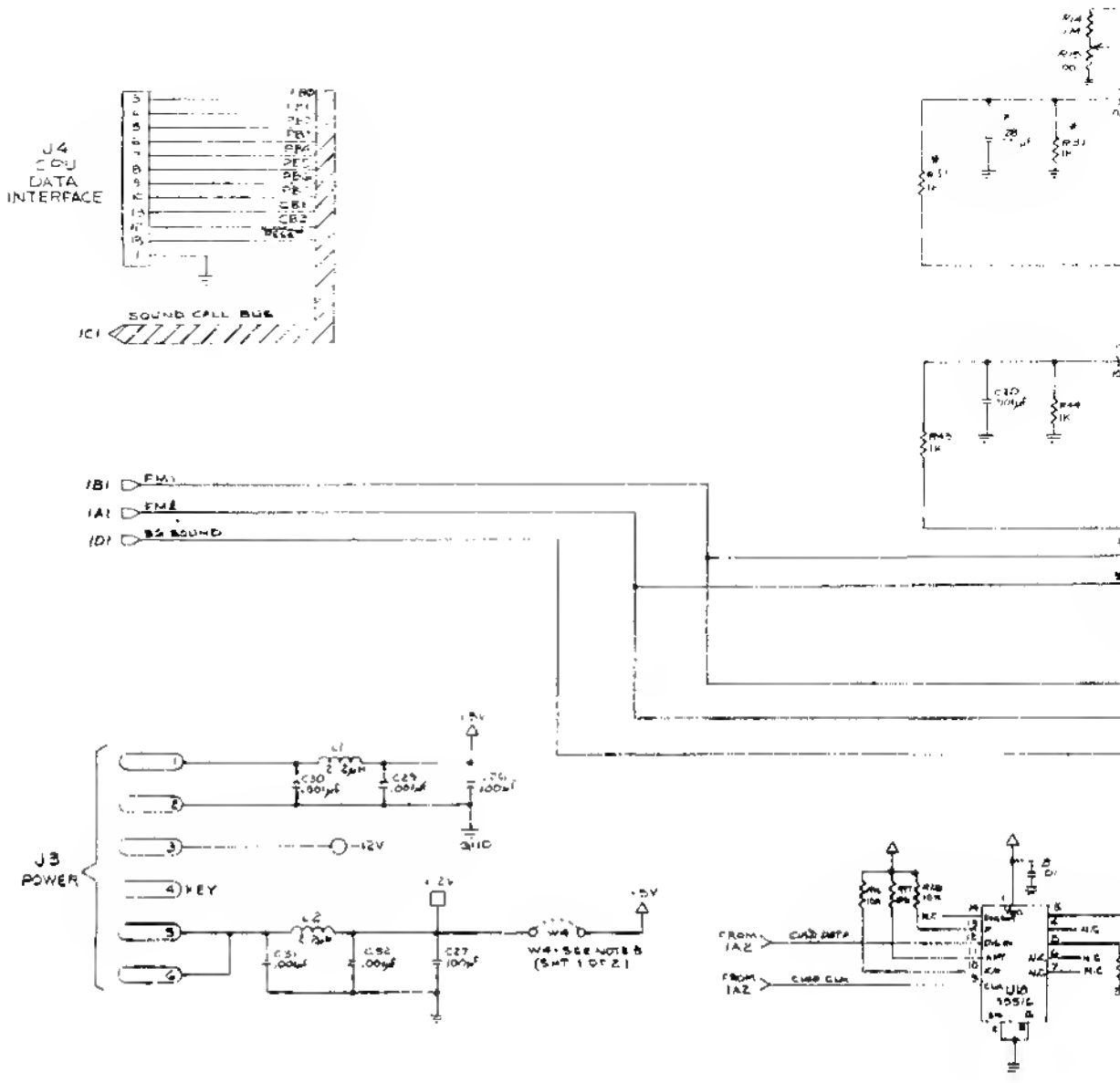
J4
CPU
DATA
INTERFACE
SOUND CALL BUS
IC1
1B1 FM1
1A1 FM2
1D1 B6 SOUND
J3
POWER
KEY
-12V
+12V
+5V
W4 - SEE NOTE 8
(SHT 1 OF 2)
FROM 1A2
FROM 1A2
U18
555/L

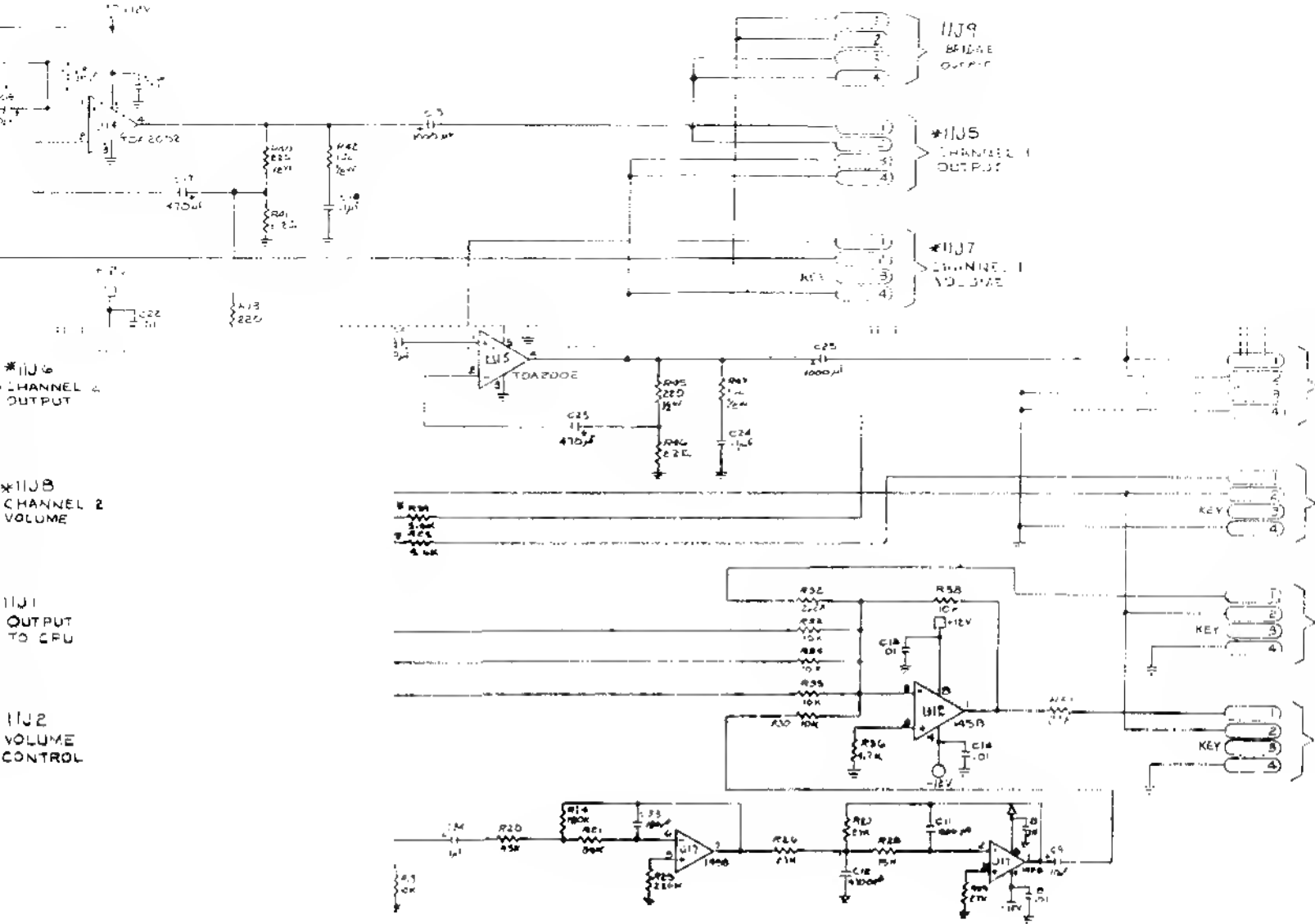

7) Schematic

Alphanumeric Master Display Board (D-1087

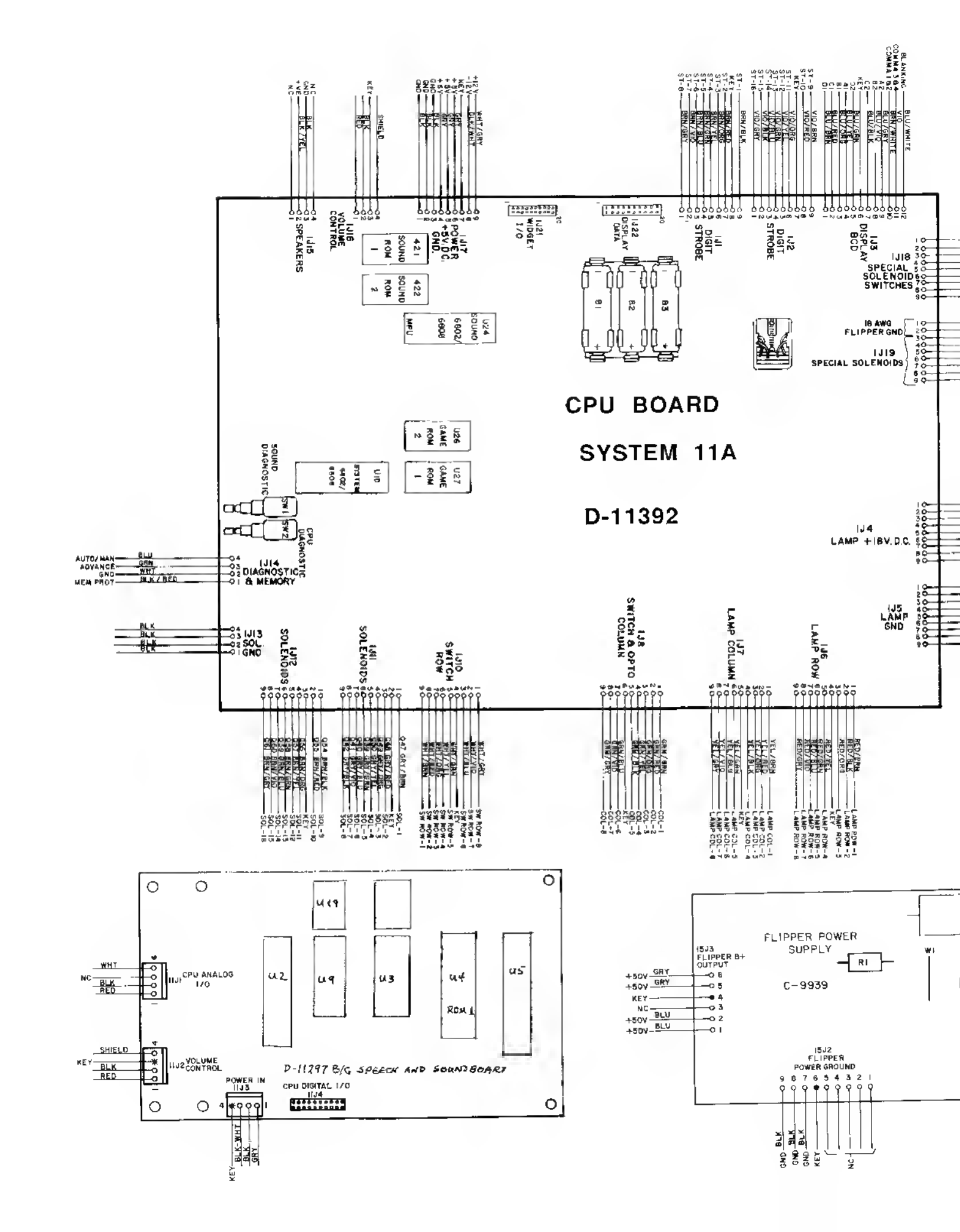
CPU BOARD
SYSTEM 11A
D-11392
IJ1 DIGIT STROBE
IJ2 DIGIT STROBE
IJ3 DISPLAY BCD
IJ4 LAMP +18V. D.C.
IJ5 LAMP GND
IJ6 LAMP ROW
IJ7 LAMP COLUMN
IJ8 SWITCH & OPTO COLUMN
IJ9 SOLENOIDS
IJ10 SWITCH ROW
IJ12 SOLENOIDS
IJ13 SOL. GND
IJ14 DIAGNOSTIC & MEMORY
IJ15 SPEAKERS
IJ16 VOLUME CONTROL
IJ17 POWER D.C. +5V. GND.
IJ18 SPECIAL SOLENOID SWITCHES
IJ19 SPECIAL SOLENOIDS
IJ21 WIDGET I/O
IJ22 DISPLAY DATA
16 AWG FLIPPER GND
SOUND ROM 1
SOUND ROM 2
GAME ROM 1
GAME ROM 2
SOUND DIAGNOSTIC
CPU DIAGNOSTIC
AUTO/MAN ADVANCE GND MEM PROT
B1
B2
B3
D-11297 B/G SPEECH AND SOUND BOARD
CPU ANALOG I/O
VOLUME CONTROL
POWER IN IIJ3
CPU DIGITAL I/O IIJ4
FLIPPER POWER SUPPLY
C-9939
R1
W1
I5J3 FLIPPER B+ OUTPUT
I5J2 FLIPPER POWER GROUND

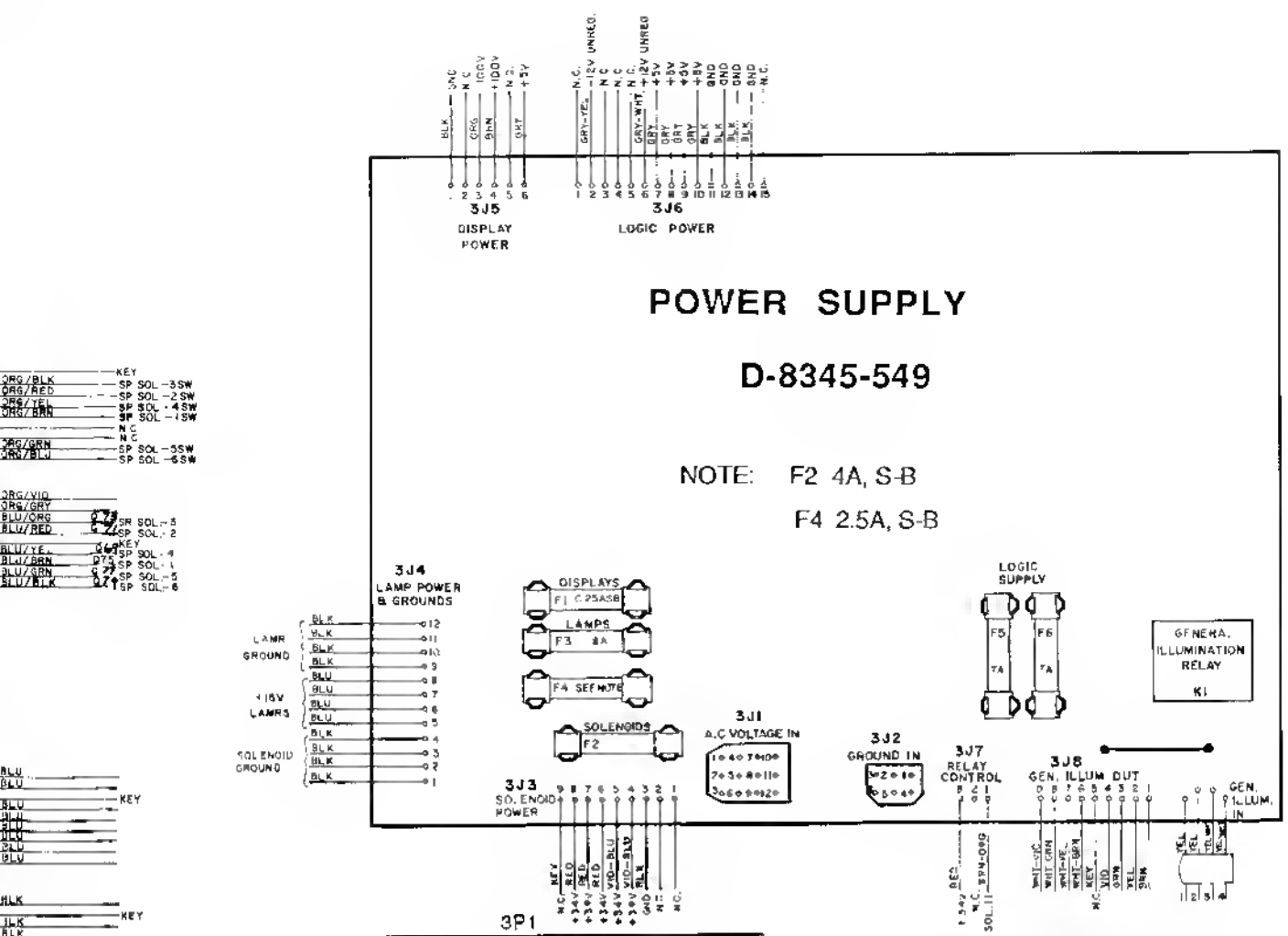

3P1

Pin	Wire Color	Connection
1	VIO	Lamp Rectifier, + 18V DC
2	ORN	Solenoid Rectifier, +34V DC
3	ORN	Solenoid Rectifier, +34V DC
4	WHT	Transformer, 88.5V AC
5	—	
6	—	
7	—	
8	—	
9	WHT	Transformer, 88.5V AC
10	GRY-GRN	Transformer, 19·4V AC, 1Ø, C.T.
11	GRY	Transformer, 19·4V AC, 1Ø, C.T.
12	GRY-WHT	Transformer, 19·4V AC, C.T. Com.

3P2

Pin	Wire Color	Connection
1	—	
2	—	
3	BLK	Lamp Rectifier (Gnd)
4	—	
5	—	
6	BLK	Lamp Rectifier (Gnd)

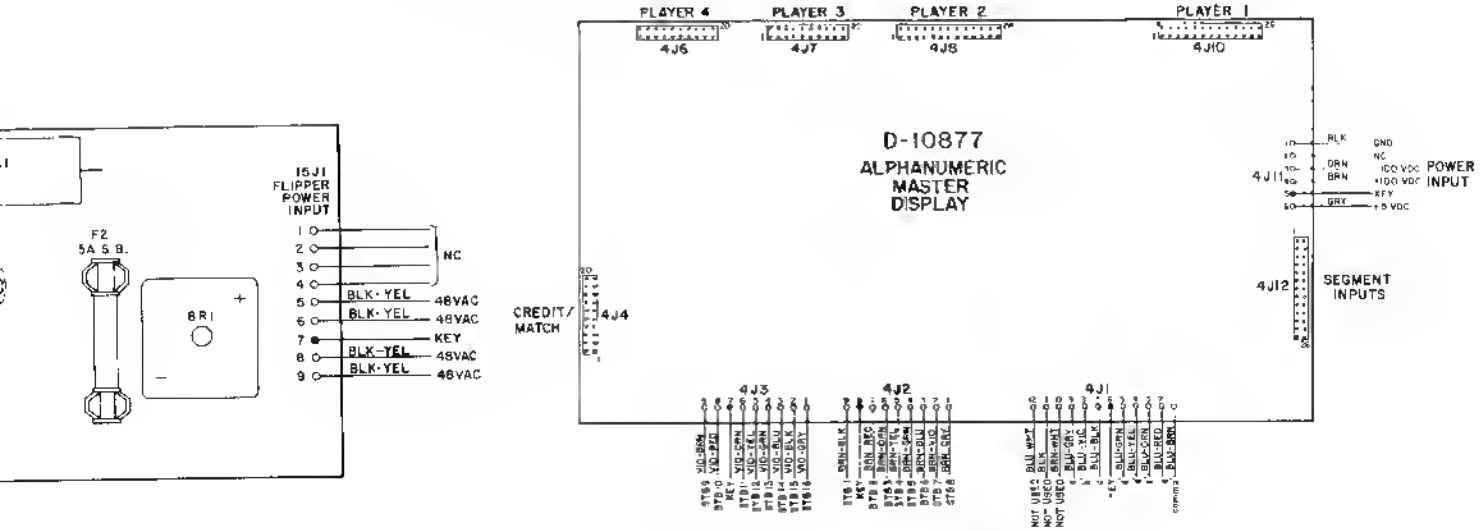

Interboards Signals Diagrams

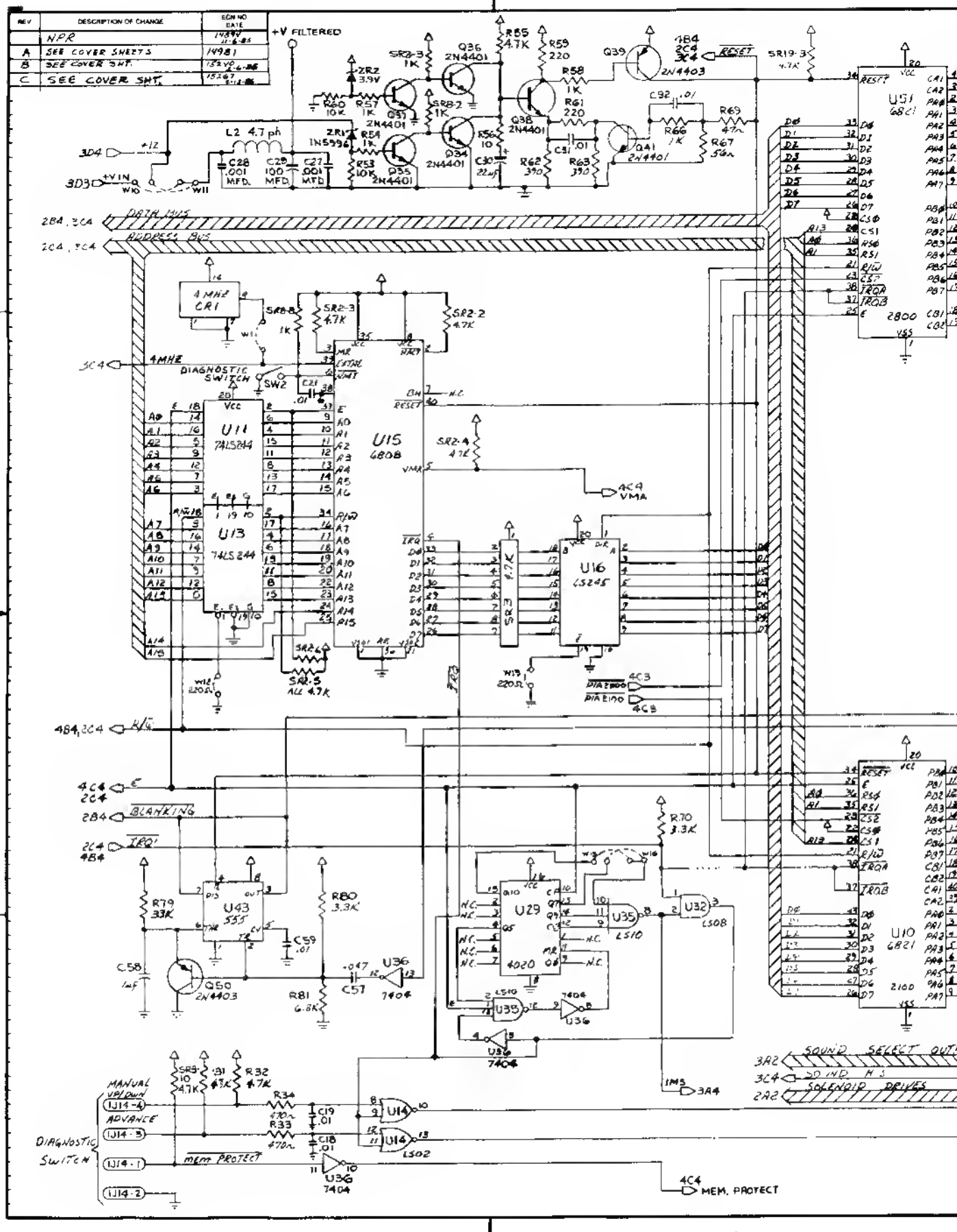
REV
DESCRIPTION OF CHANGE
ECN NO DATE
NPR
A SEE COVER SHEETS
B SEE COVER SHT.
C SEE COVER SHT.
+V FILTERED
+12
+5 IN
DATA BUS
ADDRESS BUS
4 MHZ CR1
DIAGNOSTIC SWITCH SW2
4MHZ
U11 74LS244
U13 74LS244
U15 6808
U16 LS245
U51 6821
2800
U10 6821
2100
U43 555
U29 4020
U35 LS10
U32 LS08
U36 7404
U14 LS02
4C4 VMA
4C4 MEM. PROTECT
SOUND SELECT OUT
SOLENOID DRIVES
MANUAL UP/DOWN
ADVANCE
DIAGNOSTIC SWITCH
MEM PROTECT
BLANKING
RESET
IRQ

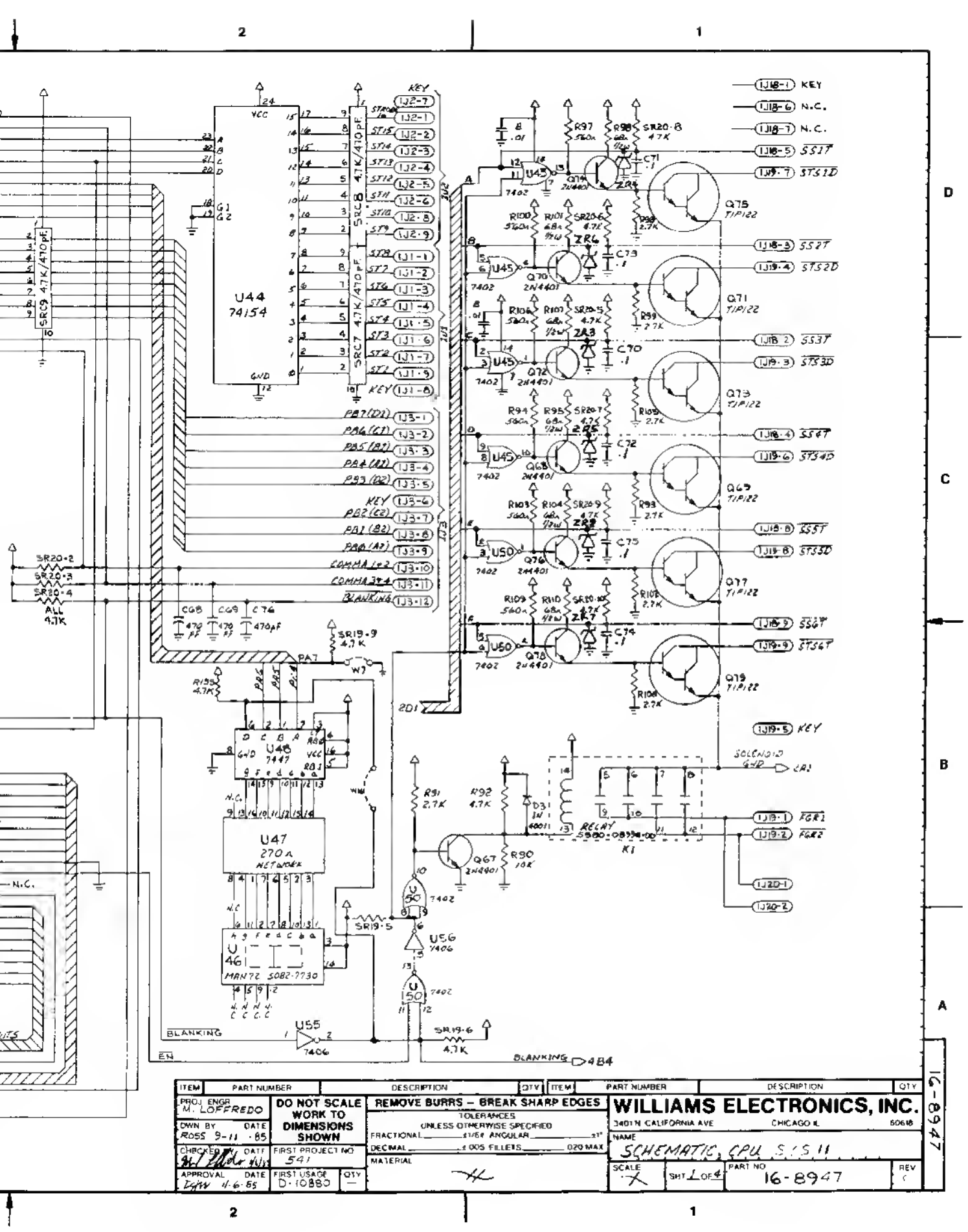

Schematic, System 11 CPU Board (16-8947, Sheet 1 of 4)

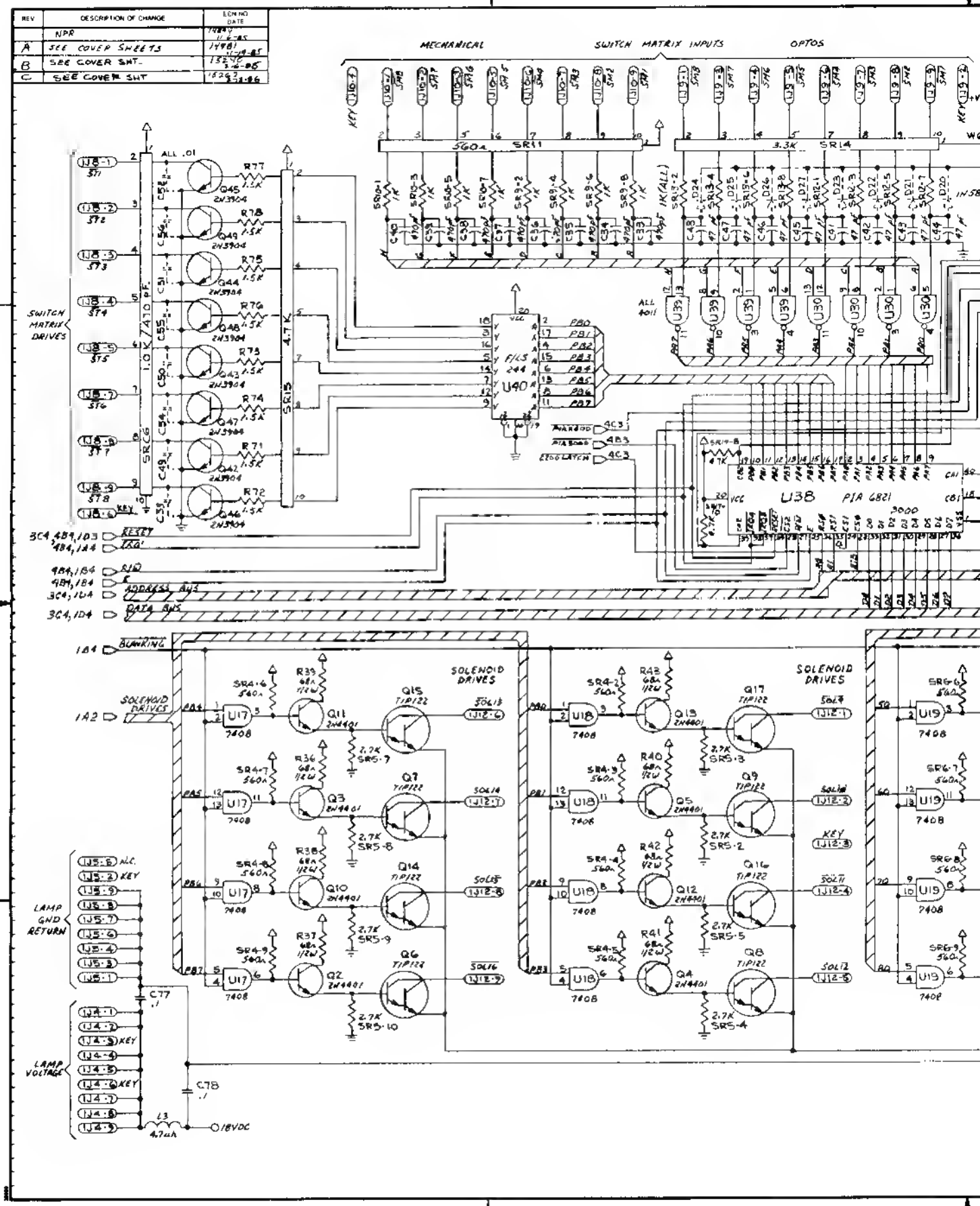
REV
DESCRIPTION OF CHANGE
ECN NO DATE
NPR
A SEE COVER SHEETS
B SEE COVER SHT.
C SEE COVER SHT
MECHANICAL
SWITCH MATRIX INPUTS
OPTOS
SWITCH MATRIX DRIVES
U40 F/LS 244
U38 PIA 6821
SOLENOID DRIVES
LAMP GND RETURN
LAMP VOLTAGE
+18VDC
BLANKING
RESET
IRQ
R/W
ADDRESS BUS
DATA BUS

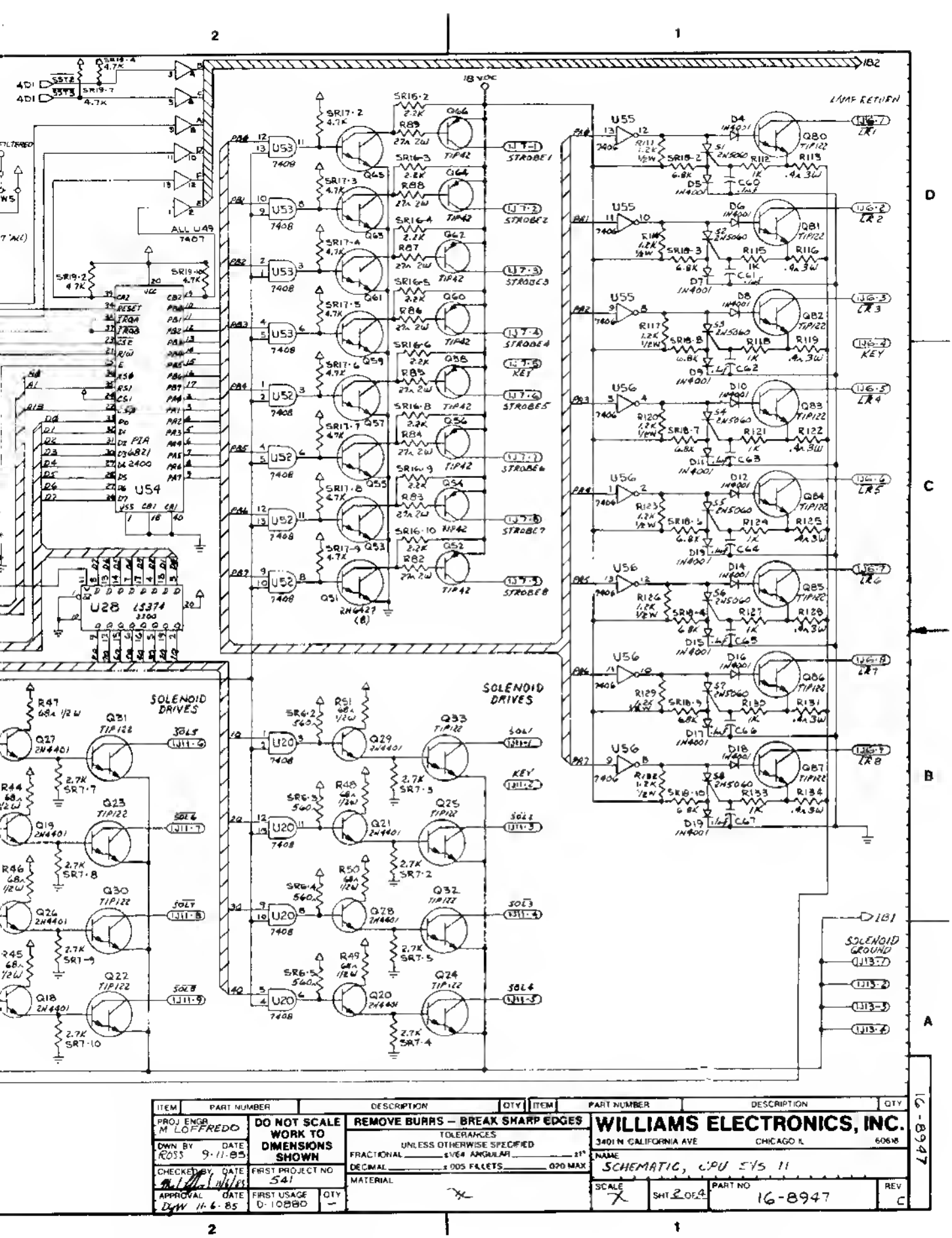

Schematic, System 11 CPU Board (16-8947, Sheet 2 of 4)

REV	DESCRIPTION OF CHANGE	ECN NO DATE
	N P R.	14884 12-8-83
A	SEE COVER SHEETS	14981 11-19-84
B	SEE COVER SHT	15240 3-8-84
C	SEE COVER SHT	15267 2-13-86

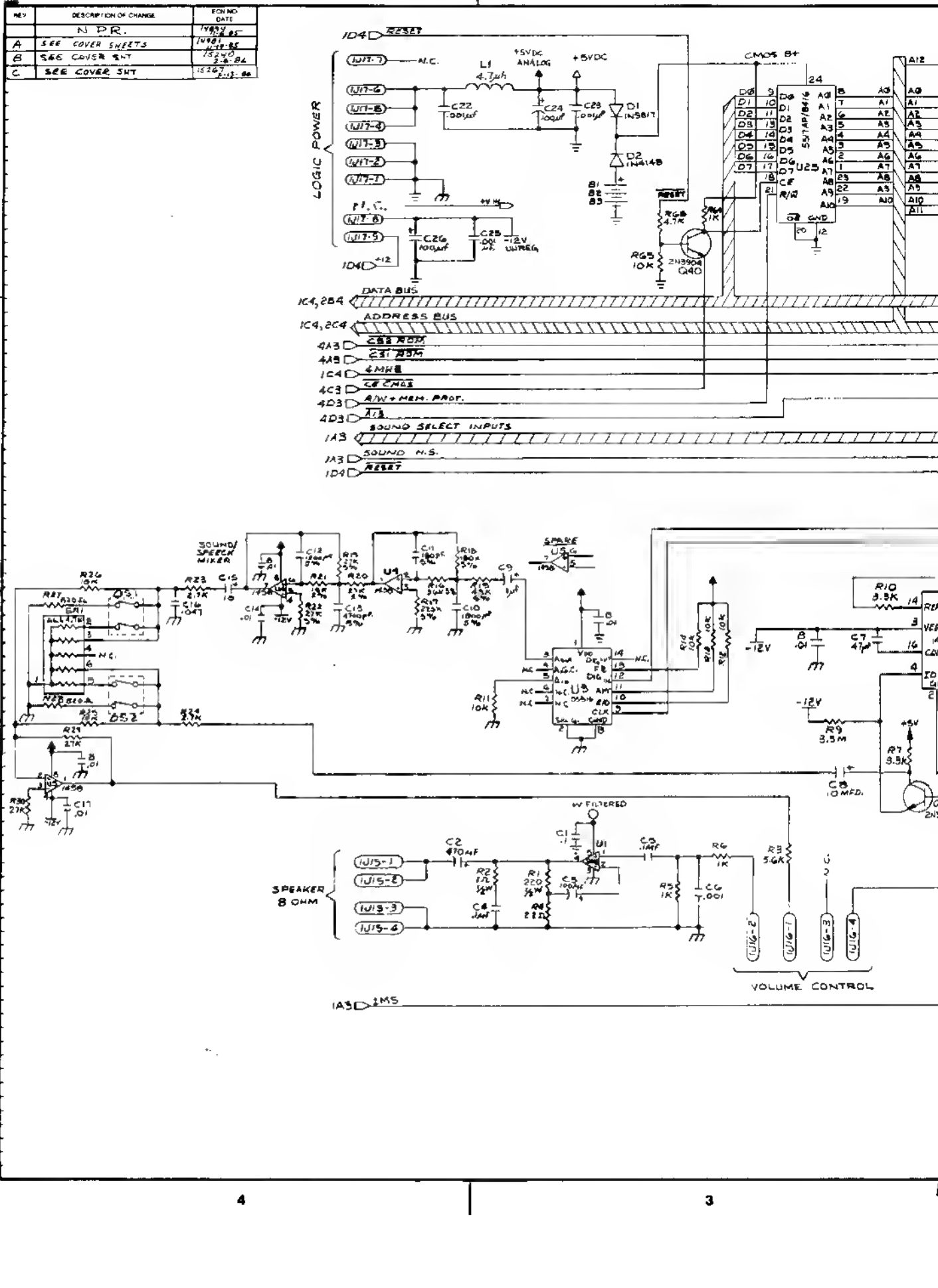

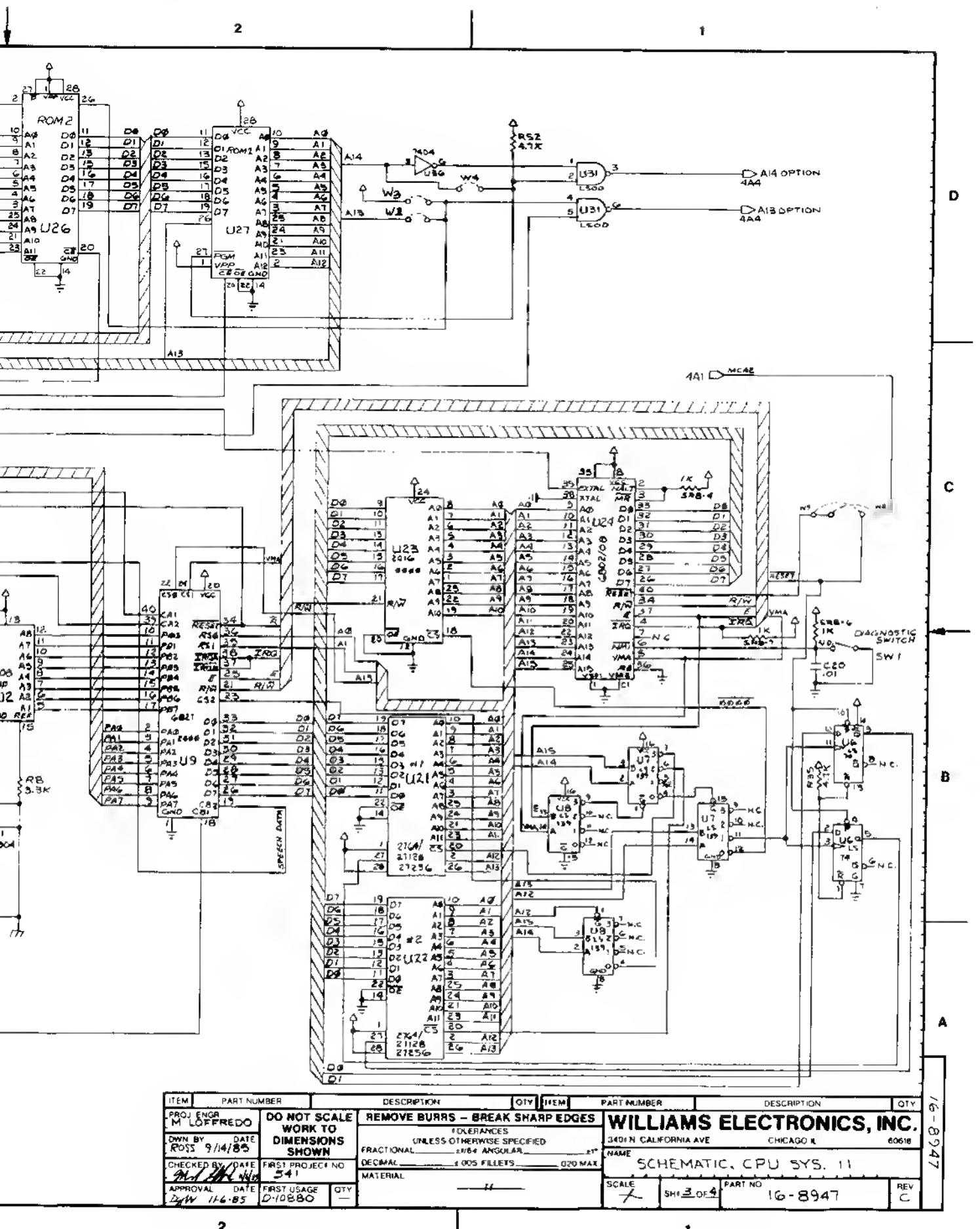

Schematic, System 11 CPU Board (16-8947, Sheet 3 of 4)

REV	DESCRIPTION OF CHANGE	ECN NO DATE
	N. P. R.	14894 11-8-85
A	SEE COVER SHEETS	14981 11-19-85
B	SEE COVER SHT.	15240 2-5-86
C	SEE COVER SHT.	15267 3-13-86

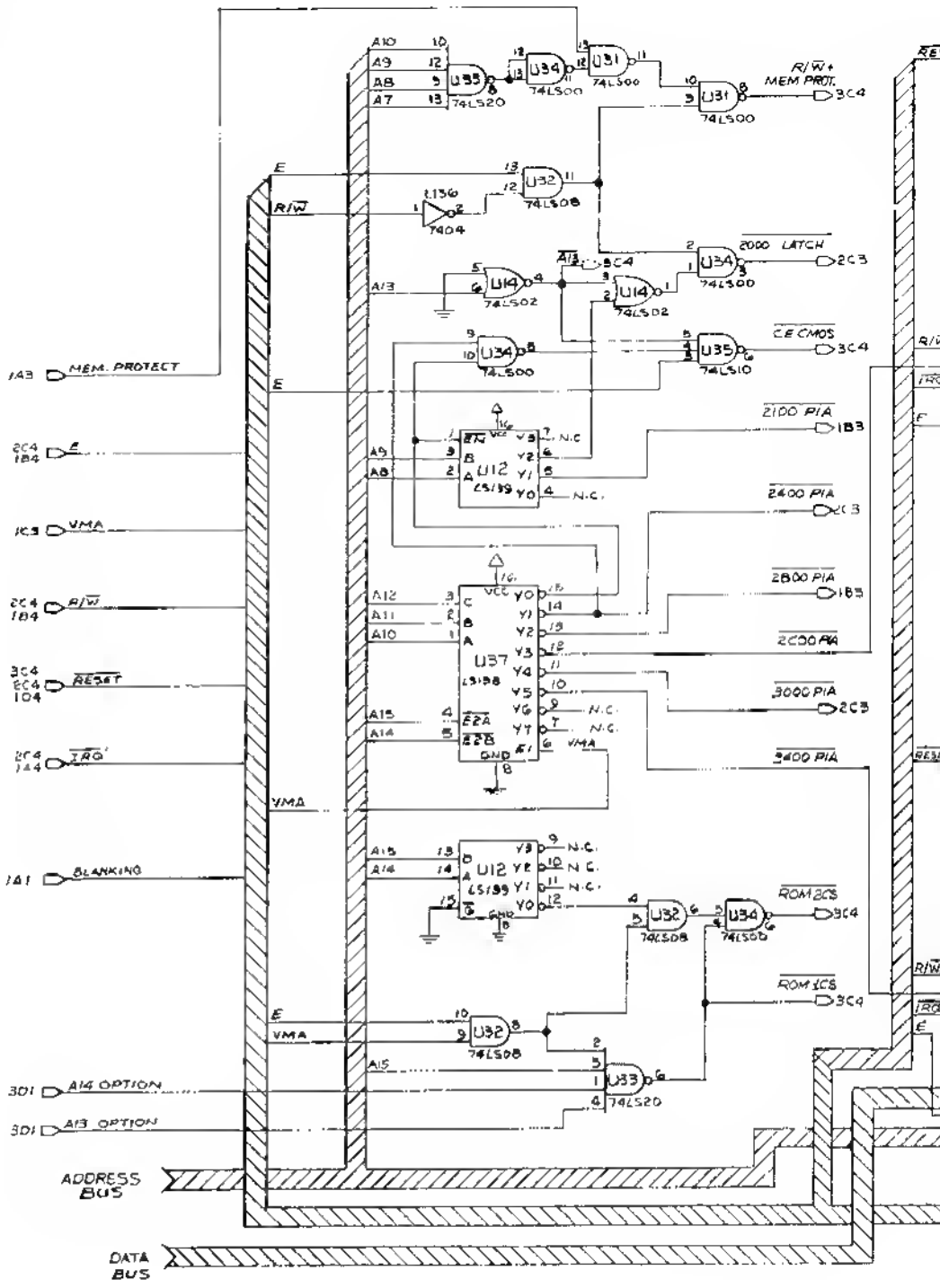

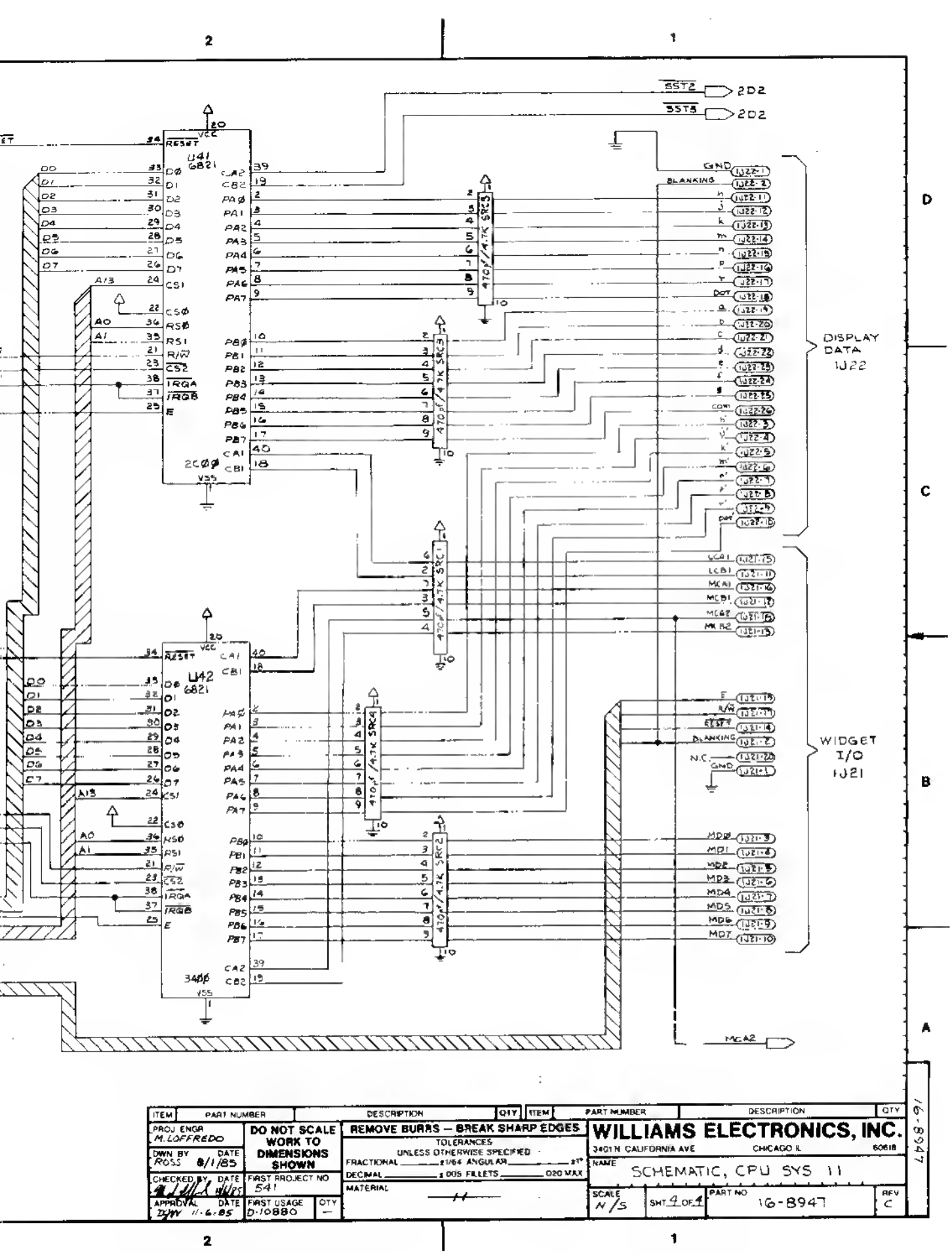

ITEM	PART NUMBER	DESCRIPTION	QTY	ITEM	PART NUMBER	DESCRIPTION	QTY

PROJ ENGR M. LOFFREDO
DWN BY ROSS 8/1/85
CHECKED BY
APPROVAL DATE 11-6-85

DO NOT SCALE WORK TO DIMENSIONS SHOWN

FIRST PROJECT NO 541
FIRST USAGE D-10880
QTY —

REMOVE BURRS — BREAK SHARP EDGES
TOLERANCES UNLESS OTHERWISE SPECIFIED
FRACTIONAL ±1/64 ANGULAR ±1°
DECIMAL ±.005 FILLETS .020 MAX
MATERIAL

WILLIAMS ELECTRONICS, INC.
3401 N CALIFORNIA AVE CHICAGO IL 60618

NAME SCHEMATIC, CPU SYS 11
SCALE N/S SHT 4 OF 4
PART NO 16-8947
REV C

16-8947

Schematic, System 11 CPU Board (16-8947, Sheet 4 of 4)

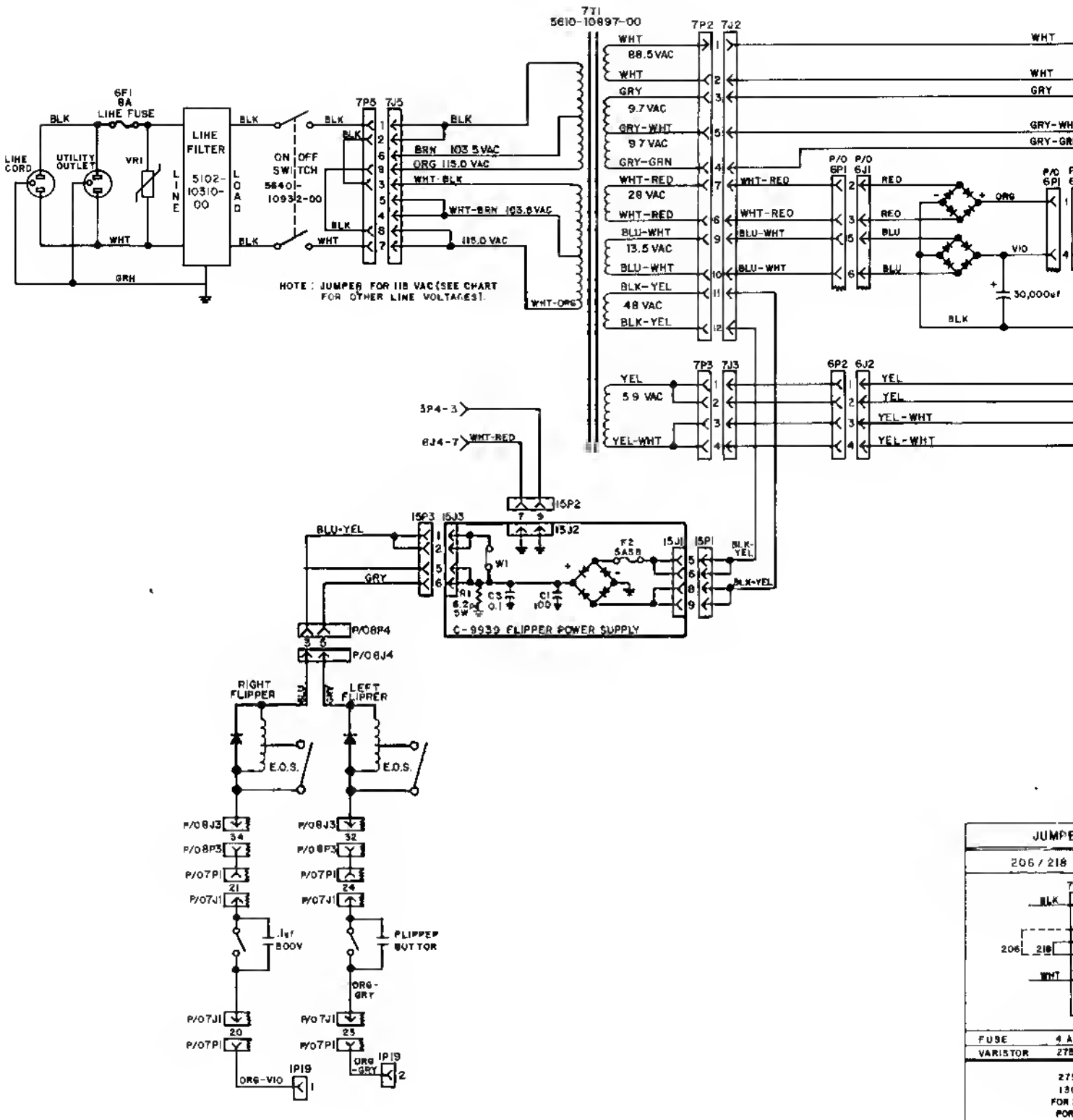

7T1
5610-10897-00
7P2 7J2
WHT
88.5 VAC
GRY
9.7 VAC
GRY-WHT
9.7 VAC
GRY-GRN
WHT-RED
28 VAC
BLU-WHT
13.5 VAC
BLK-YEL
48 VAC
6F1
8A
LINE FUSE
LINE CORD
UTILITY OUTLET
VR1
LINE FILTER
5102-10310-00
LINE
LOAD
ON OFF SWITCH
5640-10932-00
7P5 7J5
BRN 103.5 VAC
ORG 115.0 VAC
WHT-BLK
WHT-BRN 103.5 VAC
115.0 VAC
WHT-ORG
GRN
NOTE: JUMPER FOR 115 VAC (SEE CHART FOR OTHER LINE VOLTAGES).
P/O 6P1 P/O 6J1
RED
BLU
ORG
VIO
30,000uf
7P3 7J3
YEL
5.9 VAC
YEL-WHT
6P2 6J2
3P4-3
6J4-7
15P2
15P3 15J3
15J2
15J1 15P1
BLU-YEL
GRY
W1
F2 5A5B
R1 6.2 5W
C3 0.1
C1 100
C-9939 FLIPPER POWER SUPPLY
P/O8P4
P/O6J4
RIGHT FLIPPER
LEFT FLIPPER
E.O.S.
P/O8J3
P/O8P3
P/O7P1
P/O7J1
.1uf 800V
FLIPPER BUTTON
ORG-GRY
ORG-VIO
1P19
JUMPE
206 / 218
FUSE
VARISTOR

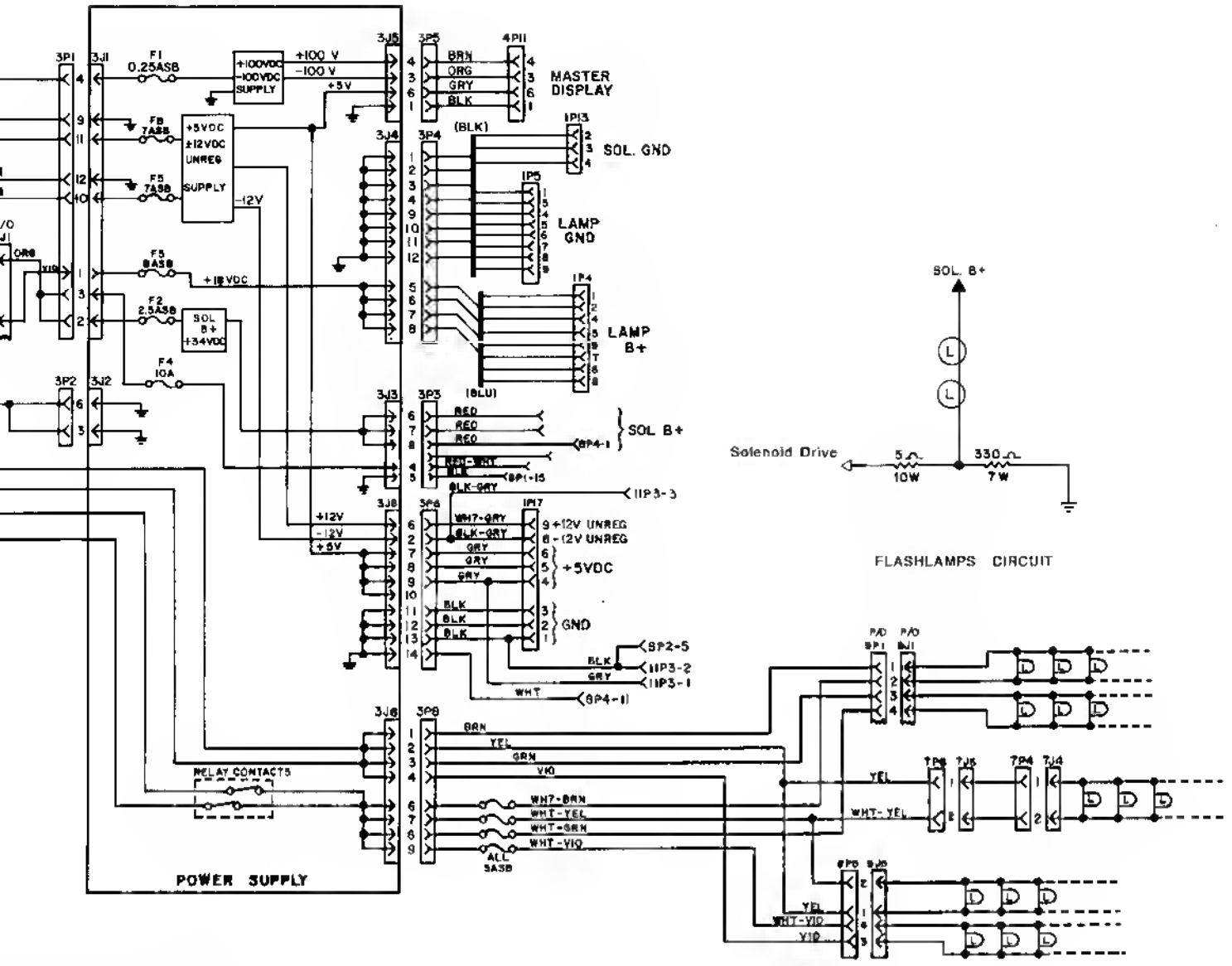

R CHART (Transformer)

VAC	230 VAC	103.5 VAC
	7P5 BLK WHT	7P5 BLK WHT
8	4 ASB	8 ASB
V	275 V	130 V

V. VARISTOR: 5017-08065-00
V VARISTOR: 5017-08044-00
220 VAC SB 5731-08314-00
115 VAC SB: 5730-09252-00

Power Wiring Diagram

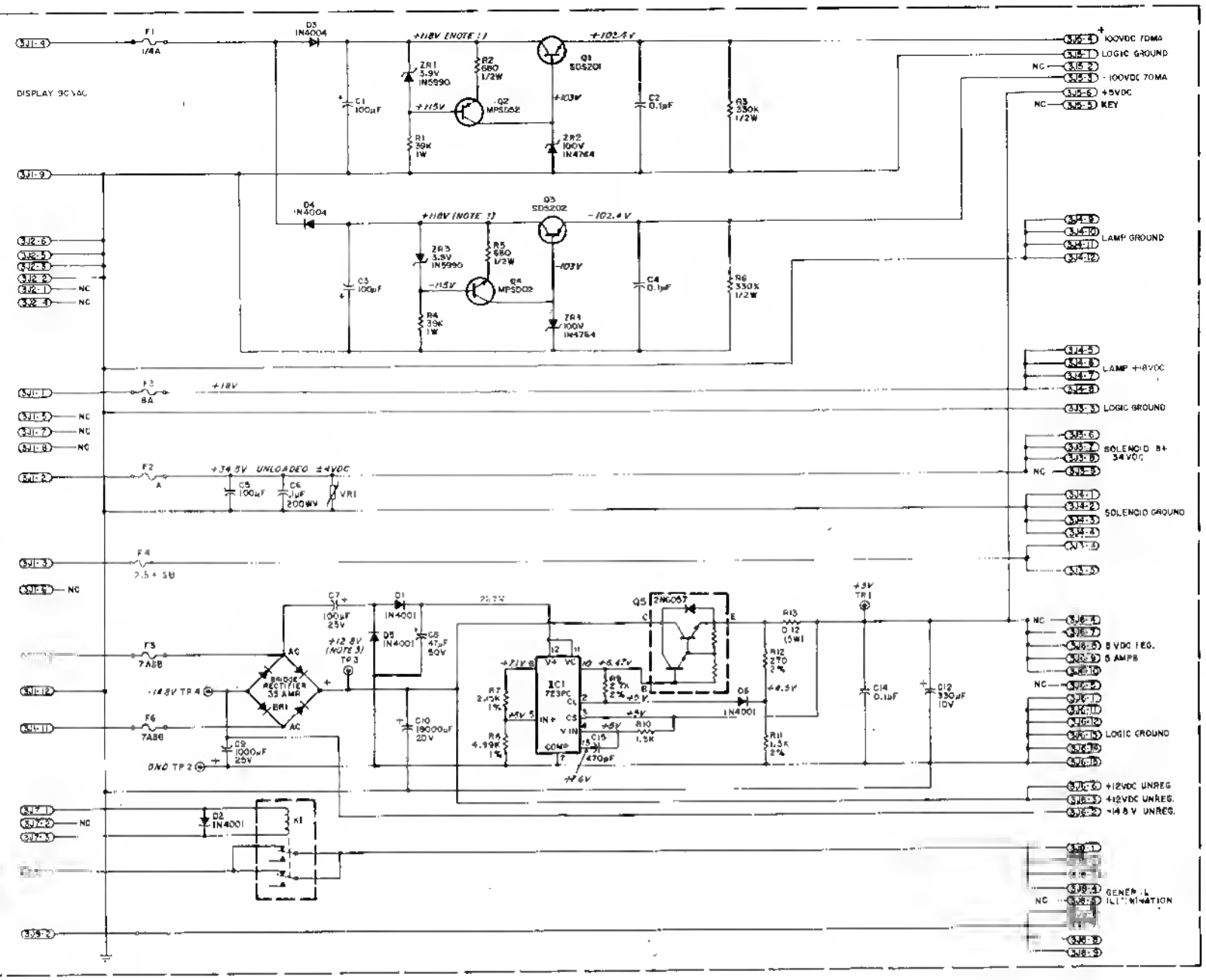

NOTES:

1. Display voltage measured with digits display test ON, and displays at all zeroes.
2. Unless otherwise indicated, all resistors are in ohms (Ω), 1/4 watt.
3. TP3 (unregulated +12 VDC) readout should not go lower than +10.5 V, or intermittent reset will occur.

D-8345 Power Supply Schematic

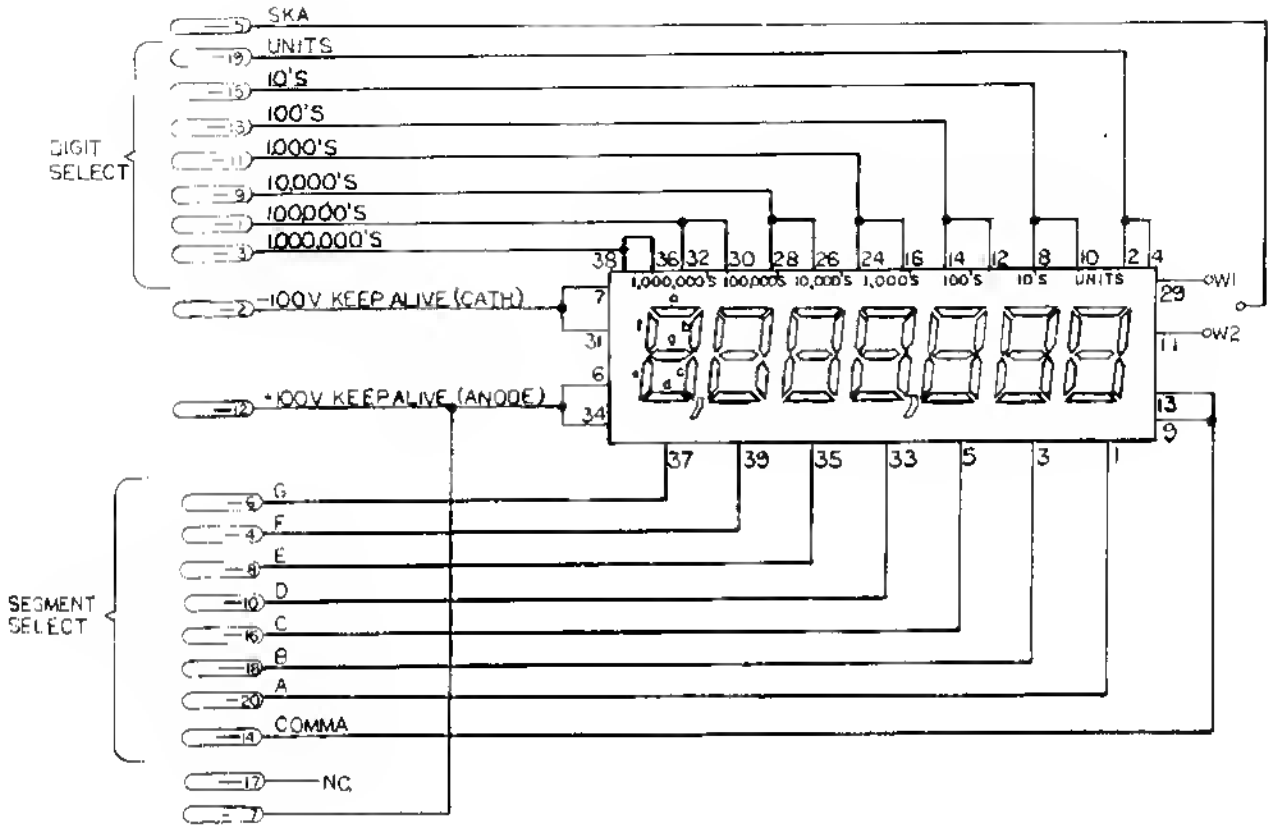

C-8364-1 Player Score Display Panel Schematic

[2] Double Lamp

PIN·BOT Lamp-Matrix Table

Δ = #555 Bulb, p/n 24-8767
Remaining Lamps – #44 Bulb, p/n 24-6549

COLUMN / ROW	1 Q66 YEL-BRN 1J7-1	2 Q64 YEL-RED 1J7-2	3 Q62 YEL-ORN 1J7-3	4 Q60 YEL-BLK 1J7-4	5 Q58 YEL-GRN 1J7-6	6 Q56 YEL-BLU 1J7-7	7 Q54 YEL-VIO 1J7-8	8 Q52 YEL-GRY 1J7-9
Q80 1 RED-BRN 1J6-1	Game Over (Backbox) [2] 1	2X 9	Drop Targets' Single Timer Lamp 17	Earth 25	Shoot Again (Playfield) 33	Drop Targets' Top Lamp 41	Left Outlane Extra Ball 49	Right Outlane Extra Ball 57
Q81 2 RED-BLK 1J6-2	Match (Backbox) 2	3X 10	Advance Planet 18	Venus 26	Score ENERGY 34	Drop Targets' Middle Lamp 42	Left Return Extra Ball 50	Right Return Extra Ball 58
Q82 3 RED-ORN 1J6-3	Ball In Play (Backbox) 3	4X 11	Pluto 19	Mercury 27	Solar Energy Value 35	Drop Targets' Bottom Lamp 43	Special 51	Not Used 59
Q83 4 RED-YEL 1J6-5	Mouth 1 (Backbox Left) 4	5X 12	Neptune 20	Yellow Δ 1 (Top) 28	Blue Δ 1 (Top) 36	Amber Δ 1 (Top) 44	Green Δ 1 (Top) 52	Red Δ 1 (Top) 60
Q84 5 RED-GRN 1J6-6	Mouth 2 (Backbox) 5	Single Eject's 25K 13	Uranus 21	Yellow Δ 2 29	Blue Δ 2 37	Amber Δ 2 45	Green Δ 2 53	Red Δ 2 61
Q85 6 RED-BLU 1J6-7	Mouth 3 (Backbox) 6	Single Eject's 50K 14	Saturn 22	Yellow Δ 3 30	Blue Δ 3 38	Amber Δ 3 46	Green Δ 3 54	Red Δ 3 62
Q86 7 RED-VIO 1J6-8	Mouth 4 (Backbox) 7	Single Eject's 75K 15	Jupiter 23	Yellow Δ 4 31	Blue Δ 4 39	Amber Δ 4 47	Green Δ 4 55	Red Δ 4 63
Q87 8 RED-GRY 1J6-9	Mouth 5 (Backbox Right) 8	Single Eject's Lrght Extra Ball 16	Mars 24	Yellow Δ 5 (Bottom) 32	Blue Δ 5 (Bottom) 40	Amber Δ 5 (Bottom) 48	Green Δ 5 (Bottom) 56	Red Δ 5 (Bottom) 64

PIN·BOT Switch-Matrix Table

COLUMN / ROW	1 Q45 GRN-BRN 1J8-1	2 Q49 GRN-RED 1J8-2	3 Q44 GRN-ORN 1J8-3	4 Q48 GRN-YEL 1J8-4	5 Q43 GRN-BLK 1J8-5	6 Q47 GRN-BLU 1J8-7	7 Q42 GRN-VIO 1J8-8	8 Q46 GRN-GRY 1J8-9
1 WHT-BRN 1J10-9	Plumb Bob Tilt 1	Playfield Tilt 9	Ball Trough #1 (Lower Right) 17	Left Eject 25	Right 5-Bank (Top) 33	Not Used 41	Left Drop Target (Upper) 49	Not Used 57
2 WHT-RED 1J10-8	Ball Roll Tilt 2	Left Lane Change 10	Ball Trough #2 (Center) 18	Right Eject 26	Right 5-Bank 34	Not Used 42	Left Drop Target (Mid) 50	Not Used 58
3 WHT-ORN 1J10-7	Credit Button 3	Right Lane Change 11	Advance Planet 19	Not Used 27	Right 5-Bank (Center) 35	Not Used 43	Left Drop Target (Lower) 51	10 Point 59
4 WHT-YEL 1J10-6	Right Coin Chute 4	Left Outlane 12	Shooter Lane 20	Visor Target 1 (Left) 28	Right 5-Bank 36	Ramp Down 44	Top Jet Bumper 52	10 Point 60
5 WHT-GRN 1J10-5	Center Coin Chute 5	Left Return Lane 13	Not Used 21	Visor Target 2 29	Right 5-Bank (Bottom) 37	Score Energy 45	Bottom Jet Bumper 53	Not Used 61
6 WHT-BLU 1J10-3	Left Coin Chute 6	Right Return Lane 14	Vortex 20K 22	Visor Target 3 (Center) 30	Single Eject 38	Visor Closed 46	Left Sling 54	Not Used 62
7 WHT-VIO 1J10-2	Slam Tilt 7	Right Outlane 15	Vortex 100K 23	Visor Target 4 31	Exit Ramp 39	Visor Open 47	Right Sling 55	Not Used 63
8 WHT-GRY 1J10-1	High-Score Reset 8	Outhole 16	Vortex 5K (Exit) 24	Visor Target 5 (Right) 32	Enter Ramp 40	Left Jet Bumper 48	10 Point 56	Not Used 64